FOUR YEAR B.E. DEGREE COURSE
MECHANICAL ENGINEERING
A.U. COLLEGE OF ENGINERING

SCHEME OF INSTRUCTION AND EXAMINATION
(Effective from the batch admitted during 2006-2007)

II YEAR
FIRST SEMESTER

Code	Name of the subject	Periods per week		Max. marks		Credits
		Lec.	Lab/Dwg.	Exam	Sess.	
MEC 211	Mathematics – III	5		70	30	4
MEC 212	Engineering Mechanics	5		70	30	4
MEC 213	Mechanics of Solids – I	5		70	30	4
MEC 214	Engineering Thermodynamics – I	5		70	30	4
MEC 215	Machine Drawing		3	70	30	4
MEC 216	Manufacturing Technology – I	5		70	30	4
MEC 217	Strength of Materials Lab		3	50	50	2
MEC 218	Mechanical Engineering Lab – I		3	50	50	2
Total		25	9	520	280	28

SECOND SEMESTER

MEC 221	Mathematics – IV	5		70	30	4
MEC 222	Material Science	5		70	30	4
MEC 223	Environmental Sciences	5		70	30	2
MEC 224	Electrical Technology	5		70	30	4
MEC 225	Theory of Machines-I	5		70	30	4
MEC 226	Manufacturing Technology – II	5		70	30	4
MEC 227	Manufacturing Technology Lab– I		3	50	50	2
MEC 228	Electrical Engineering Lab		3	50	50	2
Total		30	6	520	280	26

III YEAR
FIRST SEMESTER

Code	Name of the subject	Periods per week		Max. marks		Credits
		Lec.	Lab/Dwg.	Exam	Sess.	
MEC 311	Industrial Electronics	5		70	30	4
MEC 312	Mechanics of Solids – II	5		70	30	4
MEC 313	Engineering Thermodynamics – II	5		70	30	4
MEC 314	Theory of Machines – II	5		70	30	4
MEC 315	Production Drawing		3	70	30	4
MEC 316	Elective-I	5		70	30	4
MEC 317	Mechanical Engineering Lab – II		3	50	50	2
MEC 318	Manufacturing Technology Lab–II		3	50	50	2
MEC 319	Soft Skills Lab		3		100	1
Total		25	12	520	380	29

SECOND SEMESTER

MEC 321	Fluid Mechanics	5		70	30	4
MEC 322	Design of Machine Elements – I	5		70	30	4
MEC 323	Manufacturing Technology – III	5		70	30	4
MEC 324	Industrial Engineering and Management	5		70	30	4
MEC 325	Elective-II	5		70	30	4
MEC 326	Engineering Thermodynamics-III	5		70	30	4
MEC 327	Metrology Lab/Mechatronics Lab		3	50	50	2

MCH 328	Industrial Engineering Lab		3	50	50	2
	Industrial Training *					
Total		30	6	520	280	28

*During summer vacation

IV YEAR
FIRST SEMESTER

Code	Name of the subject	Periods per week		Max. marks		Credits
		Lec.	Lab/Dwg.	Exam	Sess.	
MEC 411	Design of Machine Elements-II	5		70	30	4
MEC 412	Heat and Mass Transfer	5		70	30	4
MEC 413	Fluid Machinery and Systems	5		70	30	4
MEC 414	Statistical Quality Control	5		70	30	4
MEC 415	Elective – III	5		70	30	4
MEC 416	Operation Research	5		70	30	4
MEC 417	Heat and Mass Transfer Lab		3	50	50	2
MME 418	FMM Lab		3	50	50	2
MME419	Industrial Training				100	2
Total		30	6	520	380	30

SECOND SEMESTER

MEC 421	Instrumentation and Control Systems	5		70	30	4
MEC 422	Computer Aided Design	5		70	30	4
MEC 423	Engineering Economics	5		70	30	4
MEC 424	Project		6	50	50	8
MEC 425	Computer Aided Design Lab		3	50	50	2
Total		15	9	310	190	22

Elective – I :
(A) Refrigeration and Air Conditioning
(B) Advanced Foundry and Welding Technology
(C) Work Study
(D) Power Plant Engineering
(E) Finite Element Analysis
(F) Computer Graphics

Elective – II :
(A) Gas Turbines and Jet Propulsion
(B) Automobile Engineering
(C) Tool Design
(D) Production Planning and Control
(E) Robotics
(F) Mechatronics

Elective – III :
(A) Computational Fluid Dynamics
(B) Non Conventional Energy Sources
(C) Computer Numerical Control and Computer Aided Manufacturing
(D) Total Quality Management
(E) Optimization Design
(F) Engineering Tribology

B.E. (MECH.) - II/IV
(I-SEMESTER)
MEC 211 - MATHEMATICS-III

(Effective from the batch admitted during 2006-2007- Credit System)

Periods/week : 5 Th Ses. : 30 Exam : 70
Examination (Theory): 3hrs. Credits : 4

(Common for ALL branches except Chemical Engineering)

Vector Calculus: Differentiation of vectors; Curves in space; Velocity and acceleration; Relative velocity and acceleration; Scalar and vector point functions; Vector operator ∇. ∇ applied to scalar point functions; Gradient; ∇ applied to vector point functions; Divergence and Curl. Physical interpretations of $\nabla.F$ and $\nabla\times F$ applied twice to point functions; ∇ applied to products of point functions; Integration of vectors; Line integral; Circulation; Work; Surface integral-Flux; Green's theorem in the plane; Stake's theorem; Volume integral; Divergence theorem; Irrotational and Solenoidal fields; Green's theorem; Introduction to orthogonal curvilinear coordinates: Cylindrical; Spherical and polar coordinates.

Introduction to Partial Differential Equations: Formation of partial differential equations; Solutions of a PDEs; Equations solvable by direct integration; Linear equations of first order; Homogeneous linear equations with constant coefficients; Rules for finding the complementary function; Rules for finding the particular integral; Working procedure to solve homogeneous linear equations of any order; Non-homogeneous linear equations.

Applications of Partial Differential Equations: Method of separation of variables; Vibrations of a stretched string-wave equations; One-dimensional heat flow; Two dimensional and two dimensional heat flow equations; Solution of Laplace's equation; Laplace's equation in polar coordinates.

Integral Transforms: Introduction; Definition; Fourier integrals; Sine and cosine integrals; Complex forms of Fourier integral; Fourier transform; Fourier sine and cosine transforms; Finite Fourier sine and cosine transforms; Properties of F-transforms; Convolution theorem for F-transforms; Parseval's identity for F-transforms; Fourier transforms of the derivatives of a function; Application to boundary value problems using inverse Fourier Transforms only.

Text Book:

1. Higher Engineering Mathematics, (34th edition 1998) by B.S. Grewal.

References:

1. A Text Book on Engineering Mathematics, by M.P. Bali et al.
2. Higher Engineering Mathematics by M.K. Venkataraman.
3. Advanced Mathematics for Engineering Students, Vol. 2 & Vol. 3 by Narayanan et al.
4. Advanced Engineering Mathematics by Erwin Kreyszig.
5. Engineering Mathematics by P.P.Gupta.
6. Advanced Engineering Mathematics by V.P.Jaggi and A.B.Mathur.
7. Engineering Mathematics by S.S. Sastry.
8. Advanced Engineering Mathematics by M.L. Das.

MEC 212 - ENGINEERING MECHANICS

(Effective from the batch admitted during 2006-2007- Credit System)

Periods/week : 5 Th Ses. : 30 Exam : 70
Examination (Theory): 3hrs. Credits : 4

STATICS

Basic Concepts: Scalar and vector quantities- Representation vectors- Free vector force, Specification of force- Effect of force on rigid body- Free body diagram.

Concurrent Forces and Parallel Forces in a Plane: Principles of statics- Equilibrium of concurrent forces in a plane- Method of projections- Equilibrium of three forces in a plane-Method of moments- **Friction.** Two parallel forces- General case of parallel forces in a plane-Centre of parallel forces and centre of gravity- Centroids of composite plane figures and curves- Distributed force in a plane.
General Case of Forces in a Plane: Composition of forces in a plane- Equilibrium of forces in a plane- Plane trusses, Funicular polygon, Maxwell diagrams, method of joints, method of sections- Plane frame- method of members, Distributed force in a plane- Flexible suspension cables.
Force Systems in Space: Concurrent forces in space; method of projections, method of moments; Couples in space- Parallel forces in space- Centre of parallel forces and centre of gravity- General case of forces in space.
Principle of Virtual Work: Equilibrium of ideal systems- Efficiency of simple machines-Stable and unstable equilibrium.

DYNAMICS

Basic concepts: Kinematics- Kinetics- Newton laws of motion- Particle- Rigid body- Path of particle.
Rectilinear Translation: Kinematics of rectilinear motion Principles of dynamics- Differential equation of rectilinear motion- Motion of a particle acted upon by a constant force, Force as a function of time- Force proportional to displacement; free vibrations- D'Alembert's principle- Momentum and impulse- Work and energy- Ideal systems: conservation of energy.
Curvilinear Translation: Kinematics of curvilinear motion- Differential equations of curvilinear- Motion of a projectile- D'Alembert's principle- Moment of momentum- work and energy in curvilinear motion.
Rotation of rigid body about a fixed axis: Kinematics of rotation- Equation of motion for a rigid body rotating about a fixed axis- Rotation under the action of a constant moment
Torsional vibration- The compound pendulum- General case of moment proportional to angle of rotation- D'Alembert's principle in rotation.
Plane Motion of a Rigid Body: Kinematics of plane motion- Instantaneous center- Equations of plane motion- D'Alembert's principle in plane motion- The principle of angular momentum in plane motion- Energy equation for plane motion.

Text Book:
1. Engineering Mechanics by S.Timoshenko and D.HYoung McGraw-Hill.

References:
1. Engineering Mechanics, Vol.2 by J.L. Meriems and L.G. Kraige.
2. Engineering Mechanics by Singer.
3. Engineering Mechanics by K.L. Kumar, Tata Mc-Graw Hill.
4. Engineering mechanics by Bhavikatti. New age international.

MEC 213 – MECHANICS OF SOLIDS-I

(Effective from the batch admitted during 2006-2007- Credit System)

Periods/week : 5 Th Ses. : 30 Exam : 70
Examination (Theory): 3hrs. Credits : 4

Simple Stresses: Stress, Strain, Stress- Strain curve, Lateral strain, Relationship between elastic constants, Bars of varying cross-section, Compound bars, Temperature stresses in bars. Complex Stresses: Stresses on an inclined plane under different uniaxial and biaxial stress conditions, Principal planes and principal stresses, Mohr's circle, Relation between elastic constants, Strain energy, Impact loading.
Bending Moments and Shear Forces: Beam - Types of loads, Types of supports, S.F. and B.M. diagrams for cantilever, Simply supported and over hanging beams.
Stresses in Beams: Theory of bending, Flexural formula, Shear stresses in beams.
Deflections of Beams: Relation between curvature, slope and deflection, double integration method, Macaulay's method, Moment area method.

Torsional Stresses in Shafts and Springs: Analysis of torsional stresses, Power transmitted, Combined bending and torsion, Closed and open coiled helical springs. Laminated springs.
Theories of Failure: Application to design of shafts.
Cylinders and Spherical Shells: Stresses and strains in thin cylinders, Thin spherical shell.

Text Book:
1. Analysis of Structures, by Vazirani and Ratwani, Vol. 1, 1993 edition.

Reference:
1. Strength of Materials, by Timoshenko

MEC 214 - ENGINEERING THERMODYNAMICS-I

(Effective from the batch admitted during 2006-2007- Credit System)

Periods/week : 5 Th Ses. : 30 Exam : 70
Examination (Theory): 3hrs. Credits : 4

Introduction: Basic concepts; Thermodynamic systems; Micro & Macro systems; Homogeneous and heterogeneous systems; Concept of continuum; Pure substance; Thermodynamic equilibrium; State; Property; Path; Process; Reversible and irreversible cycles; Work; Heat; Point function; Path function; Heat transfer.
Zeroth law of thermodynamics; Concept of equality of temperatures- Joule's experiments-First law of thermodynamics- Isolated systems and steady flow systems- Specific heats at constant volume and pressure - Enthalpy- First law applied to flow systems- Systems undergoing a cycle and change of state- First law applied to steady flow processes-Limitations of first law of thermodynamics.
Perfect gas laws- Equation of state- Universal gas constant, various non-flow processes-Properties of end states- Heat transfer and work transfer- Change in internal energy-throttling and free expansion-Flow processes- Deviations from perfect gas model-Vanderwall's equation of state- Compressibility charts- Variable specific heats.
Second law of thermodynamics- Kelvin Plank statement and Clasius statement and their equivalence, Corollaries- Perpetual motion machines of first kind and second kind-Reversibility and irreversibility- Cause of irreversibility- Carnot cycle- Heat engines and heat pumps- Carnot efficiency- Clasius theorem- Clasius inequality- Concept of entropy-Principles of increase of entropy-Entropy and disorder.
Availability and irreversibility- Helmholtz function and Gibbs function- Availability in steady flow-Entropy equation for flow process- Maxwell's equations- Tds relations- Heat capacities.
Air standard cycles-Air standard efficiency- Otto cycle-Diesel cycle- Dual cycle- Brayton cycle-Atkinson cycle- Stirling cycle- Erickson cycle

Text Books:
1. Engineering Thermodynamics, by P.K. Nag, Tata McGraw-Hill Publications Company.
2. Applied Thermodynamics-I by R. Yadav, Central Book House.
3. Engineering Thermodynamics by K. Ramakrishna, Anuradha agencies.

References Books:
1. Engineering Thermodynamics by Rathakrishnan, Prentice - Hall India.
2. Engineering Thermodynamics by Y.V.C. Rao.
3. Thermal Engineering by R.K. Rajput, S.Chand & Co.
4. Engineering Thermodynamics Work and Heat Transfer, by G.F.C Rogers and Y.R. Mayhew, ELBS publication
5. Engineering Thermodynamics by Zemansky.

MEC 215 – MACHINE DRAWING

(Effective from the batch admitted during 2006-2007- Credit System)

Periods/week : 4 Drawing Ses. : 30 Exam : 70
Examination : 3hrs. Credits : 4

(Common to Mechanical and MPIE)

Screw threads and Screw Fastenings using standard Empirical formulae.
Riveted joints, Keys, Cotter-joints, Pin-joints.
Shaft couplings: Box and split muff couplings, Flanged, Flexible, Universal and Oldham couplings, shaft bearings, Brackets and Hangers, Pipe joints.
Orthogonal views and Sectional views of machine parts.
Assembly drawing of various engine components and machine tool components.

Text Books:

1. Machine Drawing, by N.D.Bhatt, Charotal Publishing House.
2. Engineering Drawing, by A.C.Parkinson, Wheeler Publishing.

Reference:

1. Machine Drawing by K.L Narayan, P. Kannaiah and K. Venkata Reddy, New Age.

MEC 216 - MANUFACTURING TECHNOLOGY-I

(Effective from the batch admitted during 2006-2007- Credit System)

Periods/week : 5 Th Ses. : 30 Exam : 70
Examination (Theory): 3hrs. Credits : 4

Manufacturing concepts; Product cycle; Job, batch and mass production; Primary and secondary manufacturing processes; Principle of metal casting; Terminology; Pattern; Types; Allowances; Materials; Core boxes; Selection; Testing and preparation of moulding sands; Moulding tools and equipment; Machine moulding; Core making; Sprue; Runner, gates and risers; Types and designing; Melting and pouring the metal; Shell mold casting; Investment casting; Permanent mould casting; Casting defects.

Formability of metals; Cold and hot working; Rolling; Types; Roll size; Stretch forming, metal spinning, embossing and coining; Peening; Sheet metal forming operations; Presses; Die design.

Forging materials; Forging processes; Forging techniques; Forging presses; Forging pressure distribution and forging force; Automation of forging; Swaging; Drawing; Extrusion; High energy rate forming.

Weldability; Welding metallurgy; Principles and processes of arc welding (SMAW, GTAW, GMAW, FCAW, PAW, SAW); Welding equipment; Weld positioners and fixtures; Oxyacetylene welding; Flame cutting; Brazing and soldering; Principle of resistance welding; Types of resistance welds; Seam welding; Projection welding; Resistance butt welding; Solid state welding; Weld inspection and testing.

Text Book:

1. Process and Materials of Manufacture (4th Edition) by Roy A. Lindberg, Prentice-Hall of India Private Limited.

Reference Books:

1. Manufacturing Engineering & Technology by Kalpak Jain, Addition Wesley Edition.
2. Materials and Processes in Manufacturing by De Margo, Black and Kohsen, Prentice Hall of India.
3. Principles of Metal Casting by Hein and Rosenthol, Tata Mc-Graw Hill India.
4. Manufacturing Technology-Foundary, Forming and Welding by P.N. Rao, Tata McGraw-Hill Publishing Company.

MEC 217 - STRENGTH OF MATERIALS LAB

(Effective from the batch admitted during 2006-2007- Credit System)

Periods/week : 3 Lab Ses. : 50 Exam : 50
Examination : 3hrs. Credits : 2

List of Experiments:

1. To study the stress strain characteristics (tension and compression) of metals by using UTM.
2. To study the stress strain characteristics of metals by using Hounsefield Tensometer.
3. Determination of compression strength of wood.
4. Determination of hardness using different hardness testing machines- Brinnels, Vickers and Rockwell's.
5. Impact test by using Izod and Charpy methods.
6. Deflection test on beams using UTM.
7. Tension shear test on M.S. Rods.
8. To find stiffness and modulus of rigidity by conducting compression tests on springs.
9. Torsion tests on circular shafts.
10. Bulking of sand.
11. Punch shear test, hardness test and compression test by using Hounsefield tensometer.
12. Sieve Analysis and determination of fineness number.

MEC 218 - MECHANICAL ENGINEERING LAB – I

(Effective from the batch admitted during 2006-2007- Credit System)

Periods/week : 3 Lab Ses. : 50 Exam : 50
Examination : 3hrs. Credits : 2

List of Experiments:

1. Study and valve timing diagrams for four-stroke and study & PTD of two-stroke engines.
2. Determination of volumetric efficiency of the given air compressor by (i) plate orifice method and (ii) tank capacity method.
3. Calibration of the given pressure gauge.
4. a) Determination of flash and fire points and
   b) Canradsons carbon residue test.
5. Determination of calorific value of flues (solid, liquid and gaseous) by Bomb calorimeter/Gas calorimeter.
6. Determination of the kinematic and absolute viscosity of the given sample oils.
7. Determination of inertia of the given flywheel and connecting rod.
8. Determination of modulus of rigidity of the given wire with torsion pendulum.
9. Study of boilers, various mountings and accessories.
10. Assembling of the given two-stroke petrol engine. (Instead of engine, any mechanical unit can be given for this experiment.)

B.E. (MECH.) - II/IV
(II-SEMESTER)
MEC 221 - MATHEMATICS-IV

(Effective from the batch admitted during 2006-2007- Credit System)

Periods/week : 5 Th Ses. : 30 Exam : 70
Examination (Theory): 3hrs. Credits : 4

(Common for ALL braches except Chemical Engineering)

Functions of a Complex Variable: Continuity concept of f(z); derivative of f(z); Cauchy-Riemann equations; Analytic functions; Harmonic functions; Orthogonal system; Applications to flow problems; Integration of complex functions; Cauchy's theorem; Cauchy's integral formula; Statements of Taylor's and Laurent's series without proofs; Singular points; Residues and residue theorem; Calculation of residues; evaluation of real definite integrals; Geometric representation of f(z); Conformal transformation; Some standard transformations: (1) w = z = c, (2) w = 1/z, (3) w = (az + b)/(cz + d), (4) $w = z^2$ and (5) $w = e^z$.

Statistical Methods:

1. Review of probability theory (not to be examined): Addition law of probability; Independent events; Multiplication law of probability; Bay's theorem; Random variable; Discrete probability distribution; Continuous probability distribution; Expectation; Moment generation function; Repeated trials; Binomial distribution; Poisson distribution; Normal distribution; Probable error; Normal approximation to Binomial distribution.
2. Sampling theory: Sampling distributions; Standard error; Testing of hypothesis; Level of significance; Confidence limits; Simple sampling of attributes; Sampling of variables: Large samples and small samples; Student's t-distribution; x -distribution; F-distribution; Fisher's Z-distribution.

Difference Equations and Z-Transforms: Z-transform; Definition; Some standard Z-transforms; Linear property; Damping rule; Some standard results; Shifting rules; Initial and final value theorems; Convolution theorem; Evaluation of inverse transforms; Definition; Order and solution of a difference equation; Formation of difference equations; Linear difference equations; Rules for finding C.F.; Rules for finding P.I.; Difference equations reducible to linear form; Simultaneous difference equations with constant coefficients; Application to deflection of a loaded string; Application of Z-transforms to difference equations.

Text Book:

1. Higher Engineering Mathematics, (34th edition 1998) by B.S. Grewal.

Reference Books:

1. A Text Book on Engineering Mathematics by N.P. Bali et al.
2. Higher Engineering Mathematics by M.K. Venkataraman.
3. Advance Mathematics for Engineering Students, Vol. 2 & Vol. 3 by Naryanan et al.
4. Advanced Engineering Mathematics by Erwin Kreyszig.
5. Engineering Mathematics by P.P. Gupta.
6. Advanced Engineering Mathematics by V.P.Jaggi and A.B.Mathur.
7. Engg. Maths, by S.S.Sastry, Printice-Hall of India, Pvt.Ltd., New Delhi-6.
8. Advanced Engineering Mathematics by H.K. Dass.
9. Engineering Mathematics Vol. 2 by Tarit Majumdar.

MEC 222 – MATERIALS SCIENCE

(Effective from the batch admitted during 2006-2007- Credit System)

Periods/week : 5 Th Ses. : 30 Exam : 70
Examination (Theory): 3hrs. Credits : 4

Space Lattice and unit cells, crystal systems. Indices for planes and directions. Structures of common metallic materials. Crystal defects: point, line and surface defects.
Binary Phase Diagrams. Gibbs rule. Lever rule. Invariant reactions. Iron-iron carbide phase diagram. Heat treatment of steel. Isothermal transformations curves. Annealing, Normalizing, Hardening, Tempering, Austempering and Martempering of steels. Surface hardening of steels. Carburizing, Nit riding, Cyaniding, Flame and induction hardening methods.
Classification of Steels, I.S., AISI-SAE classifications. Uses and limitations of plain-carbon steels, alloy steels. Plain carbon and low alloy steels. Tool steels. Stainless steels. Cast irons. Gre, White, Malleable and SG irons, Alloy cast irons. Non-ferrous metals and alloys: Brasses and Bronzes, Bearing metals.
Plastic Deformation: Slip, Twining critical resolved shear stress. Ductile and Brittle fracture. Mechanism of creep and fatigue. High temperature alloys. Metals at low temperature. Effect of low temperature on properties: Low temperature metals.
Composite Materials. Classification. Matrices and reinforcements. Fabrication methods. Examples and applications.
NDT Testing: Ultrasonic, Magnetic, Dye penetrant and visual methods and applications radiographic.

Text Books:
1. Material Science and Engineering by V. Raghavan.
2. Physical Metallurgy by S.H. Avner.

Reference Books:
1. Material Science and Engineering by L.H.Van Vleck, 5th edition, Addison Wealey (1985).
2. Structure and Properties of Materials by R.M. Rose, L.A. Shepard and J. Wulff, Vol.1, 4 John Willey (1966).
3. Essentials of Material Science by A.G. Guy, McGraw-Hill (1976).
4. The Science and Engineering Materials by D.R. Askeland, 2nd edition, Chapman and Hall (1990).

MEC 223 – ENVIRONMENTAL SCIENCE

(Effective from the batch admitted during 2006-2007- Credit System)

Periods/week : 5 Th Ses. : 30 Exam : 70
Examination (Theory): 3hrs. Credits : 4

(Common to ALL branches)

MEC 224 – ELECTRICAL TECHNOLOGY

(Effective from the batch admitted during 2006-2007- Credit System)

Periods/week : 5 Th Ses. : 30 Exam : 70
Examination (Theory): 3hrs. Credits : 4

Magnetic Circuits: Definitions of magnetic circuit, Reluctance, Magnetomotive force (m.m.f), Magnetic flux, Simple problems on magnetic circuits, Hysteresis loss.
Electromagnetic Induction: Faraday's laws of Electromagnetic induction, Induced E.M.F., Dynamically induced E.M.F., Statically induced E.M.F., Self inductance, Mutual inductance.
D.C. Generators: D.C. generator principle, Construction of D.C. generator, E.M.F. equation of D.C. generator, Types of D.C. generators, Armature reaction, Losses in D.C. generator, Efficiency, Characteristics of D.C. generators, Applications of D.C. generator.
D.C. Motors: D.C. motor principle, Working of D.C. motors, Significance of back E.M.F., Torque equation of D.C. motors, Types of D.C. motors, Characteristics of D.C. motors, Speed control

methods of D.C. motors, Applications of D.C. motor. Testing of D.C. machines: Losses and efficiency, Direct load test and Swinburne's test.

A.C. Circuits: Introduction of steady state analysis of A.C. circuits, Single and balanced 3-phase circuits.

Transformers: Transformer principle, E.M.F. equation of transformer, Transformer on load, Equivalent circuit of transformer, Voltage regulation of transformer, Losses in a transformer, Calculation of efficiency and regulation by open circuit and short circuit tests.

Three Phase Induction Motor: Induction motor working principle, Construction of 3-phase induction motor, Principle of operation, Types of 3-phase induction motor, Torque equation of induction motor, Slip-torque characteristics, Starting torque, Torque under running condition, Maximum torque equation, Power stages of induction motor, Efficiency calculation of induction motor by direct loading.

Alternator: Alternator working principle, E.M.F. equation of alternator, Voltage regulation by sync, impedance method.

Synchronous Motor: Synchronous motor principle of operation, Construction. Methods of starting of synchronous motor.

Electrical Measurements: Principles of measurement of current, voltage, power and energy. Types of Ammeters, Voltmeters, Watt-meters, Energy meters, Electrical conductivity meter. Potentiometer, Megger.

Text Book:

1. Elements of Electrical Engineering and Electronics by V.K. Mehta, S. Chand & Co.

Reference:

1. A First Course in Electrical Engineering by Kothari.

MEC 225 – THEORY OF MACHINES–I

(Effective from the batch admitted during 2006-2007- Credit System)

Periods/week : 5 Th Ses. : 30 Exam : 70

Examination (Theory): 3hrs. Credits : 4

Mechanisms and Machines: Introduction; Mechanism and machine; Rigid and resistant bodies; Link; Kinematic pair; Degrees of freedom; Classification of kinematic pairs; Kinematic chain; Linkage, mechanism and structure; Mobility of mechanisms; The four-bar chain; Mechanical advantage; Transmission angle; The slider-crank chain; Double slider-crank chain; Miscellaneous mechanisms.

Velocity Analysis: Introduction; Absolute and relative motions; Vectors; Additional and subtraction of vectors; Motion of a link; Four-link mechanism; Velocity images; Angular velocity of links; Velocity of rubbing; Slider-crank mechanism; Crank and slotted lever mechanism; Algebraic methods; Instantaneous center (I-center); Kennedy's theorem; Locating I-centers; Angular velocity ratio theorem; centrode.

Acceleration Analysis: Introduction; Acceleration; Four-link mechanism; Four-link mechanism; Acceleration of intermediate and offset points; Slider-crank mechanism; Corriolis acceleration component; Crank and slotted lever mechanism; Algebraic methods; Klein's construction; Velocity and acceleration from displacement-time curve.

Lower Pairs: Introduction; Pantograph; Straight line mechanisms; Engine indicators; Automobile steering gears; Types of steering gears; Hooke's joint; Double Hooke's joint.

Friction: Introduction; Kinds of friction; Laws of friction; Coefficient of friction; Inclined plane; Screw threads; Wedge; Pivots and collars; Friction clutches; Rolling friction; Antifriction bearings; Greasy friction; Greasy friction at a journal; Friction axis of a link; Film friction; Mitchell thrust bearing.

Dynamic Force Analysis: Introduction; D'Alembert's principle; Equivalent offset inertia force; Dynamic analysis of four-link mechanism; Dynamic analysis of slider-crank mechanism; Velocity and acceleration of piston; Angular velocity and angular acceleration of connecting rod; Engine force

analysis; Turning moment on crankshaft; Dynamically equivalent system; Inertia of the connecting rod; Inertia force in reciprocating engines (Graphical method); Turning-moment diagrams; Fluctuations of energy; Flywheels.

Governors: Introduction; Types of governors; Wait governor (simple conical governor); Portor governor; Proell governor; Hartnell governor; Hartung governor; Wilson-Hartnell governor (radial-spring governor); Pickering governor; Spring-controlled gravity governor; Inertia governor; Sensitiveness of a governor; Hunting; Isochronism; Stability; Effort of a governor; Power of a governor; Controlling force.

Text Book:

1. Theory of Machines by R.S.Khurmi & J.K.Gupta

Reference books:

1. Theory of Machines by Thomas Bevan.
2. Theory of Machines by S.S. Rattan.

MEC 226 - MANUFACTURING TECHNOLOGY-II

(Effective from the batch admitted during 2006-2007- Credit System)

Periods/week : 5 Th Ses. : 30 Exam : 70

Examination (Theory): 3hrs. Credits : 4

Mechanics of Metal Cutting; Chip formation & Types; Machinability; Tool materials; Tool geometry and tool signature ASA&ISO systems; Tool wear and tool life; Cutting forces and power; Measurement of forces and temperatures; Metal cutting economics; Cutting fluids.

Engine lathe; Operations; Turret and capstan lathes; Turning center; Boring machine and operations; Shaper, planner and slotter; Types; Operations; Mechanisms.

Drill geometry and cutting actions; Special drills; Drill forces and power-drilling speeds & feeds; Torque & thrust calculation; Drilling machines; Features and operations; Milling process; Milling cutting geometry; Cutting speed, feed, time and power in milling; Types of milling machines; Machining center; Broaching; Types; Tools; Machines; Broach time.

Principle; Operations; Grinding wheel manufacturing and marking balancing; Truing and dressing of grinding wheel; Grinding wheel selection; Grinding force; Grinding machines.

Abrasive belt machining; Lapping, honing and super finishing; Electro polishing and buffing.

Equipment; Process; Characteristics; Advantages; Limitations; Applications of chemical milling; Photochemical milling; EDM-computer controlled-traveling wire; ECM; AJM; LBM; EBM; WJM.

Text Book:

1. Process and Materials of Manufacture (4th Edition) by Roy A. Lindberg, Prentice-Hall of India Private Limited.

Reference Books:

1. Fundamentals of Metal Machining and Machine Tools by Geoffrey Boothroyd, International Student Edition, Mc Graw-Hill Book Company.
2. Metal Cutting Principles by M.C. Shaw, MIT Press, Cambridge.
3. Advanced Methods of Machining by J. A. Mc Geough, Chapman & Hall Publishers.
4. Metal Cutting-Theory and Practice by Amitabha Bhattacharya, Central Book Publishers.
5. Production Engineering by P.C. Sharma, S. Chand and Company.

MEC 227 - MANUFACTURING TECHNOLOGY LAB – I

(Effective from the batch admitted during 2006-2007- Credit System)

Periods/week : 3 Lab Ses. : 50 Exam : 50

Examination : 3hrs. Credits : 2

List of Experiments:

Use of basic tools and operations of the following trades.

S. No.	Trade	No. of exercises
1.	Foundry	3
2.	Welding	2
3.	Lathe Step and taper turning Thread cutting Offset turning	1 1 1
4.	Milling	1 (Spur gear)
5.	Shaper	1

6. Cylindrical grinding, Surface grinding, Planing, Slotting and Capstan lathe (only demonstration in one class for the entire batch of students).
7. Dissembling and assembling of *
   i. Machine Tool (Lathe)
   ii. I.C. engine
   iii. Pump
   iv. Gear box

* Not for examination.

MEC 228 - ELECTRICAL ENGINEERING LAB

(Effective from the batch admitted during 2006-2007- Credit System)

Periods/week : 3 Lab Ses. : 50 Exam : 50

Examination : 3hrs. Credits : 2

List of Experiments:

1. Study and Calibration of wattmeter and energy meter.
2. Measurement of armature resistance, field resistance and filament resistance.
3. Verification of KCL and KVL.
4. Superposition theorem.
5. Parameters of a choke coil.
6. O.C. and S.C. tests on transformer.
7. Load test on D.C. shunt machine.
8. O.C. test on D.C. separately excited machine.
9. Swinburnes test.
10. 3 phase induction motor (No load and rotor block tests) load tests.
11. Alternator regulation by Syn. Impedance method.

B.E. (MECH.) - III/IV-(I-SEMESTER)
MEC 311 – INDUSTRIAL ELECTRONICS
(Effective from the batch admitted during 2006-2007- Credit System)

Periods/week: 5 Th. Ses. : 30 Exam :70
Examination (Theory): 3hrs. Credits : 4

Devices: Semi-conductor diode, Zener diode - Transistor - Silicon control rectifier. Rectifiers, Amplifiers, Oscillators, Cathode ray oscilloscope.
Industrial Applications: Poly-phase rectifiers - Control circuits - Motor speed control voltage control, Time delay relay circuits - Photo electric circuits. Resistance welding, inducting heating - Dielectric heating.
Servomechanism: Open loop and closed loop systems (Elementary treatment only).
Introduction to Digital Electronics: Fundamentals of digital electronics, Number system and codes, Logic gates, Boolean algebra, Arithmetic-logic units, Flip-flops, Registers and counters, Memories: ROM, PROM, EPROM and RAM.
Introduction to Microprocessors: The Intel-8085 microprocessor; Architecture, Instruction set, Execution of instructions, Addressing structures, Timing and machine cycles of 8085 and programming I/O operations, Interrupts, Serial input and serial output, Programming the I/O ports, Programming the timer.

Text Books:
1. Industrial Electronics by Mithal (Khanna Publications).
2. Digital Computer Electronics - An Introduction to Micro Computer by Albert Paul Malvino, Tata McGraw-Hill Publishing Co. Ltd., New Delhi-2.

References:
1. Engineering Electronics by Ryder-McGraw Hill.
2. Micro Processors by Leventhal.
3. Industrial Electronics by Bhatacharya, Tata Mc-Graw Hill.
4. Industrial Electronics and Control by S.K. Bhatacharya and S. Chatarjee, 1995 Ed., Tata Mc-Graw Hill Pub. Co. Ltd.

MEC 312 – MECHNICS OF SOLIDS – II
(Effective from the batch admitted during 2006-2007- Credit System)

Periods/week: 5 Th. Ses. : 30 Exam :70
Examination (Theory): 3hrs. Credits : 4

Fixed Beams: Fixing moments for a fixed beam of uniform and variable sections, Effect of sinking support, slope and deflection.
Continuous beams: Analysis of continuous beam, Reactions at the supports, Effect of sinking of supports.
Energy Methods - Castigliano's theorems I & II applications.
Columns and Struts: Columns with one end free and the other fixed, Both ends fixed, One end fixed and other hinged, Limitation of Euler's formula, Column with initial curvature, Column carrying eccentric load, Laterally loaded columns with Central point load and Uniformly distributed load, Empirical formulae.
Bending of Curved Bars: Stresses in bars of circular, rectangular and trapezoidal sections.
Stresses due to rotation: Wheel rim, disc of uniform thickness, disc of uniform strength.
Thick cylinders subjected to internal and external pressure and compound cylinders.

Text Books:
1. Analysis of Structures, Vol. 1, 1993 edition, by Vazirani and Ratwani.
2. Chapter VI from Advanced Topics in Strength of Materials, by Prof. L.B.Shah and Dr.R.T.Shah.

References:

1. Strength of Materials, by Timoshenko.

MEC 313 ENGINEERING THERMODYNAMICS - II

(Effective from the batch admitted during 2006-2007- Credit System)

Periods/week: 5 Th. Ses. : 30 Exam :70

Examination (Theory): 3hrs. Credits : 4

Properties of Pure Substance: Definition of pure substance, phase change of a pure substance, p-T (Pressure-Temperature) diagram for a pure substance, p-V-T(Pressure-Volume-Temperature) surface, phase change terminology and definitions, property Diagrams in common use, Formation of steam, Important terms relating to steam formation, Thermodynamic properties of steam and steam tables, External work done during evaporation, Internal latent heat, Internal energy of steam, Entropy of water, Entropy of evaporation, Entropy of wet steam, Entropy of superheated steam, Enthalpy-Entropy (h-s) charts for Mollier diagram, Determination of dryness fraction-Tank or bucket calorimeter, throttling calorimeter, separating and throttling calorimeter.

Gases and Vapour Mixtures and Vapor Power Cycles : Introduction, Daltons law and Gibbs-Dalton law, Volumetric Analysis of gas mixtures, Apparent molecular weight and gas constant, specific heats of gas mixture, Adaibatic mixing of perfect gases, Gas and vapour mixtures.Vapor power cycle- Rankine cycle- Reheat cycle- Regenerative cycle- Thermodynamic variables effecting efficiency and output of Rankine and Regenerative cycles- Improvements of efficiency, Binary vapor power cycle.**Steam Nozzles**: Type of nozzles- Flow through nozzles- Condition for maximum discharge- Nozzle efficiency- Super saturated flow in nozzles- Relationship between area velocity and pressure in nozzle flow- Steam injectors.

Steam Turbines: Classification of steam turbines- Impulse turbine and reaction turbine- Compounding in turbines- Velocity diagrams in impulse and reaction turbines- Degree of reaction- Condition for maximum efficiency of reaction turbines- Effect of friction on turbines constructional features governing of turbines.

Condensers: Classification of condenser- Jet, Evaporative and surface condensers- Vacuum and its measurement- Vacuum efficiency- Sources of air leakage in condensers- Condenser efficiency- Daltons law of partial pressures- Determination of mass of cooling water- Air pumps.

Refrigeration: Bell Colemen cycle, Vapor compression cycle- effect of suction and condensing temperature on cycle performance, Properties of common refrigerants, Vapor absorption system, Electrolux refrigerator. Principles of psychrometry and Air conditioning - Psychrometric terms, psychrometric process, air conditioning systems.

Text Books:

1. A Treatise on Heat Engineering by Vasandhani and Kumar.
2. Applied Thermodynamics-II by R. Yadav.
3. Fundamentals of Engineering Thermodynamics by E. Radhakrishna, PHI.

References:

1. Thermal Engineering, by R. K. Rajput.
2. Fluid Flow Machines, by M.S. Govinda Rao, Tata McGraw Hill publishing company Ltd.
3. Refrigeration and Air-conditioning, by C.P.Arora and Domokundwar.
4. Thermal Science and Engineering by D.S. Kumar, S.K. Kataria and Sons
5. Refrigeration and Air-conditioning, by Ahamadul Ameen, PHI.

MEC 314 - THEORY OF MACHINES - II

(Effective from the batch admitted during 2006-2007- Credit System)

Periods/week: 5 Th. Ses. : 30 Exam :70

Examination (Theory): 3hrs. Credits : 4

Gyroscopic Couple and Precessional Motion: Precessional and angular motion- gyroscopic couple- effect of gyroscopic couple on an aero plane and on a naval ship, stability of a four wheel vehicle moving in a curved path, stability of a two-wheel vehicle taking a turn.

Cams: Classification of followers and cams- Definitions- Motions of the follower- Uniform velocity- Simple harmonic motion- Uniform acceleration and retardation- Displacement- Velocity and acceleration diagrams. Construction of cam profiles- Cam with knife edged follower and roller follower- Cams with specified contours- Tangent cam with roller follower- Circular arc cam with flat faced follower.

Toothed gearing: Classification of toothed wheels, technical terms, conditions for constant velocity ratio of toothed wheels- Law of gearing- Velocity of sliding of teeth, forms of teeth- Length of contact, arc of contact, interference in involute gears, minimum number of teeth required on pinion to avoid interference- Methods of avoiding interference- Helical gears, Spiral gears- Efficiency of spiral gears.

Gear Trains: Types of gear trains- Simple, compound, reverted and epicyclic gear trains- Velocity ratio of epicyclic gear train- Tabular method- Algebraic method- Torques and tooth loads in epicyclic gear trains.

Balancing of Rotating and Reciprocating Masses: Balancing of a single rotating mass in the same plane and by two masses in different planes, balancing of several masses revolving in the same plane- Balancing of several masses revolving in different planes- Primary and secondary unbalanced forces of reciprocating masses, Partial balancing of unbalanced primary forces in a reciprocating engine, Partial balancing of locomotives- Effect of partial balancing of reciprocating parts of two cylinder locomotives- Variation of tractive force, Swaying couple and hammer blow- Balancing of primary and secondary forces in multi cylinder in-line engines- Direct and reverse cranks- Balancing of V-Engines.

Vibrations: Definitions- Types of vibrations- Natural frequencies of free longitudinal vibrations of systems having single degree of freedom- Equilibrium method- Energy method and Rayleghy's method. Frequency of damped vibration and forced vibration with damping- Magnification factor or dynamic magnifier.

Transverse and Torsional Vibrations: Natural frequency of free transverse vibrations due to point load and uniformly distributed load acting over a simply supported shaft- Transverse vibrations for a shaft subjected to number of point loads- Energy method- Dunkerley's method, Critical speed of a shaft. Natural frequency of free torsional vibrations- Free torsional vibrations of single rotor system, two rotor system, three rotor system and gear system.

Text Book:

1. Theory of Machines by R.S.Khurmi & J.K.Gupta.

Reference books:

3. Theory of Machines by Thomas Bevan.
4. Theory of Machines by S.S. Rattan.

MEC 315 - PRODUCTION DRAWING

(Effective from the batch admitted during 2006-2007- Credit System)

Periods/week: 3 Pr. Ses. : 30 Exam :70
Examination (Theory): 3hrs. Credits : 2

Introduction to Production drawing, Component drawing, Assembly drawing, Machine shop drawing, Pattern-shop drawing, Sheet metal drawing. Limits, Tolerances and Fits- Indication of surface roughness, preparation of process sheets.
Production drawings of Spur, Bevel and Helical gears, swivel bracket, main spindle, crank, revolving centre, jigs and fixtures.
Drawing of Dies. Sheet metal dies. Forging dies, stock strip layouts in sheet metal work, process layout for forge and press operations.
Cutting tool layout. Single point, multi point cutting tools for conventional and CNC machine tools.

Text Book:

1. A Text Book on Production Drawing by K.L.Narayana, P.Kannaiah and K.Venkata Reddy, New age international.

References:

1. Manufacturing technology Foundry, Forming and Welding by P.N.Rao, Tata McGraw Hill Publishing Company Ltd, New Delhi.
2. Production Technologies, HMT.

MEC 316 - ELECTIVE - I

(Effective from the batch admitted during 2006-2007- Credit System)

Periods/week: 5 Th. Ses. : 30 Exam :70
Examination (Theory): 3hrs. Credits : 4

(A) REFRIGERATION AND AIR CONDITIONING

Principles of Refrigeration: Refrigeration and II law of thermodynamics- Methods of Refrigeration- Unit of Refrigeration- Applications of Refrigeration. Air cycle Refrigeration: Reversal Carnot cycle- Bell Colman cycle- Selection of Refrigeration systems for air crafts- Boot strap system- Regenerative cycle- Reduced ambient type- Comparisons of different systems.
Vapour Compression Refrigeration: Wet versus Dry compression- Effect of evaporator pressures and temperatures. Simple vapour compression Refrigeration cycle and its analysis. Advantages and disadvantages of vapour compression Refrigeration system over Air compression Refrigeration system- Methods of improving C.O.P.- Multi compression system- Multiple evaporators expansion valves- Flash inter cooler- Defrosting- Hot gas defrosting.
Classification of Refrigerants: Nomenclature- Properties- Secondary refrigerants- Selection of refrigerants- **Condensers**- Air cooled, Water cooled and evaporative type- Evaporators- Once through, flooded, shell and tube Baudelot cooler- **Expansion devices**- Capillary expansion device, Thermostatic expansion device.
Absorption Refrigeration System: Basic absorption system- Aqua ammonia absorption system- Li-Br absorption refrigeration system- Electrolux refrigeration- C.O.P. of absorption refrigeration system- Comparison of vapour compression and vapour absorption system. Steam jet refrigeration system and analysis- Advantages and limitation- Ejector compression system.
Psychrometry: Psychrometric properties and relations- Psy chart- Psy processes- Human comfort and comfort chart- Effective temperature and factors governing effective temperature. **Air conditioning**: Summer, Winter and year round air conditioning- Different types of Air conditioning load - By pass factor, RSHP, GSHF- Fresh air quantity- Cooling coils and Dehumidity- Air washers.

Text Books:
1. Refrigeration and Air conditioning, by C.P.Arora.
2. Refrigeration and Air conditioning, by P.L.Bellany.

References:
1. Refrigeration and Air conditioning, by Jordan R.C. and Priester G.B.
2. Principles of Refrigeration, by Dossat.
3. Refrigeration and Air-conditioning, by W.P.Stoecky.

(B) ADVANCED FOUNDRY AND WELDING TECHNOLOGY

(Effective from the batch admitted during 2006-2007- Credit System)

Periods/week: 5 Th. Ses. : 30 Exam :70
Examination (Theory): 3hrs. Credits : 4

Moulding: Development of metal castings- Materials for moulding- Foundry sand control- Different types of cores- Core making processes- Materials for core making- Moulding and core making machines. Recent developments in core mould making- Cold set process- Investment process- Shell moulding- Hot box method- Shaw process. Vacuum moulding- moulding for mass production.

Melting and Solidification: Furnaces used in foundry for melting ferrous and nonferrous metals- principals of operation of cupola and charge calculations. Family of cast irons- Production of malleable and S.G. Irons- Methods of alloying and inoculants and their effects on the structure and properties of cast iron. Principles of Solidification: Nucleation- Crystal growth- Morphology and structure of cast metals and alloys- Pure metals- Single phase alloys and eutectics. Solidification in sand and chill moulds.

Foundry Mechanization: Layout for ferrous and nonferrous foundries- Description of equipment used for mechanization- Sand conditioners- Conveyors- Cranes- Equipment for handling moulds, Cores and molten metal- Knock out of moulds- Fettling equipment.

Special Welding Processes: Resistance welding processes- Spot, Seam, Projection, Flash butt welding - Machine cycle for resistance welding- Parameters in resistance welding- Electrodes for resistance welding – Solid State Welding: Cold welding – Forge welding - Ultrasonic welding Diffusion welding – Radiation welding: Laser Beam Welding, Electron Beam Welding – Automatic welding systems.

Weldability of Metals: Factors influencing weldability of metals- Welding of Cast steels, Carbon steels, Stainless steels and Cast iron. Weldability of Cu and its alloys, Al and its alloys- Ti and its alloys- Mg and its alloys- Temperature changes in welding and their effects on mechanical properties. Absorption of gases by welds and their effects- Residual stresses and distortion- Heat treatment of welded parts.

Welding Joints, Weld Symbols and Joint Design principles: Types of joints – types of welds – Variants of joints and weld types - Welding symbols – principles of weld joint design and evolving of good weld designs.

Text Books:
1. Foundry Technology, by Jain P.L.
2. Welding Engineering and Technology, by R.S. Parmar.

References:
1. Foundry Engineering, by Agarwal.
2. Foundry Engineering, by Taylor F. & Others.
3. Principles of Metal Castings, by Heine & Others.
4. Modern Welding Technology, by H.B. Cary.
5. Welding Technology, by Koenisburger.
6. Welding Metallurgy, S.Kou, 2ndedition, John Wiley and Sons, New York, NY (2003).

(C) WORK STUDY

(Effective from the batch admitted during 2006-2007- Credit System)

Periods/week: 5 Th. Ses. : 30 Exam :70
Examination (Theory): 3hrs. Credits : 4

Introduction to work study: Scientific management – Productivity - Advantages of work study to management, Supervisors and workers.
Method Study: Introduction - Process charts, Critical Examination, Identification of key activities on process charts, Diagrams and Templates, Therbligs, Micro motion analysis, Memo motion study. Developing new method - Job survey report writing.
Principles of Motion Economy: Related to human body, work place, equipment.
Work Measurement: Work measurement techniques – Rating - Measuring the job – Allowances - Standard time - Synthetic data - Analytical estimating – PMTS ,Work factor, MTM, Activity sampling, Its applications.
Job Evaluation, Techniques of job evaluation - Merit rating - Incentive plans.
Ergonomics: Basics of Ergonomics**,** Anthropometry.

Text Books:
1. Introduction to Work Study - International Labour Organisation.
2. Elements of Work Study and Ergonomics by Dalela et al, Standard Publications.

References:
1. Motion and Time Study, by Barnes, John Wiely.

(D) POWER PLANT ENGINEERING

(Effective from the batch admitted during 2006-2007- Credit System)

Periods/week: 5 Th. Ses. : 30 Exam :70
Examination (Theory): 3hrs. Credits : 4

Steam Power Plants: General Layout, Power plant cycles, Fuels-handling, storing, preparation and supply. Various stokers. Draft systems, chimney including calculations. Boilers: Construction and Heating surfaces. Mountings and accessories. High pressure and high duty forced circulation boilers land modern trends in Boiler design. Flue chambers and dampers. Steam piping–fittings–logging. Boiler performance, Flue gas testing and indicators (mechanical, electrical and chemical).
Internal Combustion Power Plants: Types of engines for power generation, Super charging, Exhaust heating fuel tanks and oil supply systems. Air supply for starting, Lubricating oils and systems of lubrication, Modern trends and design in diesel engines, Performance of engines, Care of diesel plants. Gas Turbine and other Propelled Power Plants: Introduction – Gas turbine plant– Classification and comparison of different types of gas turbine power plants – Components and different arrangements of the gas turbine plants – Indian gas turbine power plants–Governing system of gas turbine plant–Marine, Aero and Rocket Propulsion power plants.
Hydro Electric Plants: Hydrology, Hydrometric survey rainfall, Catchment, Reservoir, Run-off flow and fall, Storage and pondage, Losses due to percolation, Evaporation and transpiration. Mass–duration and flood discharge. Frequency studies and gauging. Different types of plants. Selection of site. Low, medium and high head plants and pumped storage plants. General layout of the plant – Head works, Spillways, Canals, Tunnels, Governing, Lubrication, Penstock, Anchorages and relief valves, different types of surge tanks, intakes, Gates and Valves.
Nuclear Power Plants: Classification of reactors, Thermal utilization, Fuels, Fuel moderator and coolant, Control and safety rods, Special properties of structural materials required, Induced radio-activity, Gas cooled reactors, Radiation hazards and shielding, Radio active waste disposal.
Direct Energy Conversion: Solar Energy–Introduction, Solar radiation, Solar collectors, Energy storage. Wind Energy–Wind mills. Thermo Electric–MHD and other non conventional energy sources. Power Plant Economics: Capacity factor, Load actor, Diversity factor, Peak load consideration, Factors governing capacity of plants. Cost of power plant, Cost of erection. Operating

& maintenance expenses, Cost of production, distribution of power & determination of rates.

Text Books:

1. Power Station Engineering and Economy by Benhaedt G.A.Skrotzki, William A. Vopat, MGH Book , Inc.
2. Heat Engineering, I.T. Shvets et al, MIR Pub Moscow.
3. A Course in Power Plant Engineering,S.C.Arora&S.Domdundwar.

References:

1. Solar Power Engineering by B.S. Magal, TMGHPub Co..
2. Solar Energy by S.P. Sukhatme, T MGH pub. Co.
3. Modern Power Plant Engineering by Joel Weisman, Roy Eckart, PHI.
4. Atextbook of Power Plant Engineering by P.C. Sharma,S.K. Kataria&Sons, ND.
5. Fundamentals of Nuclear Power Engineering by D.K. Singhai,Khanna Pub.

(E) FINITE ELEMENT ANALYSIS

(Effective from the batch admitted during 2006-2007- Credit System)

Periods/week: 5 Th Ses. : 30 Exam :70
Examination (Theory): 3hrs. Credits : 4

Fundamental Concepts: Introduction, Historical background, Outline of presentation, Stresses and Equilibrium, Boundary conditions, Strain-Displacement relations, Stress-Strain relations, Plane stress, Plane strain problems, Temperature effects, Potential energy and equilibrium. The Rayleigh-Ritz method, Hamilton's principle. Galerkin's method, Saint Venant's principle.

One-dimensional Problems: Introduction, Finite element modeling, Coordinates and Shape functions. The potential energy approach. The Galerkin approach, Assembly of the global stiffness matrix- mass matrix and load vector, Treatment of boundary conditions, Quadratic shape functions, Temperature effects. Trusses: Introduction, Plane trusses, Three-dimensional trusses, Assembly of global stiffness matrix for the Banded and Skyline solutions.

Two-dimensional Problems Using Constant Strain Triangles: Introduction, Finite element modeling, Constant strain triangle, In plane and Bending, problem modeling and boundary conditions.

Axisymmetric Solids Subjected to Axisymmetric Loading: Introduction, Axisymmetric formulation, Finite element modeling, Triangular element, Problem modeling and boundary conditions.

Two-dimensional Isoparametric Elements and Numerical Integration: Introduction, The four-node quadrilateral, Numerical integration, Higher-order elements. Beams and Frames: Introduction, Finite element formulation, Load vector, Boundary considerations, Shear force and bending moment, Beams on elastic supports, Plane frames.

Text Book:

1. Introduction to Finite Elements in Engineering, by Tirupathi R. Chandrupatla, Ashok D.Belegundu (chapters 1 to 8 only).

References:

1. Introduction to Finite Element Method, by S.S.Rao
2. Finite Element Method, by O.C. Zienkiewicz.
3. Concepts and Applications of Finite Element Analysis, by Robert D. Cook.
4. Introduction to Finite Element Method, by J.N.Reddy.

(F) COMPUTER GRAPHICS

(Effective from the batch admitted during 2006-2007- Credit System)

Periods/week: 5 Th. Ses. : 30 Exam :70
Examination (Theory): 3hrs. Credits : 4

Geometry and line generation: Line segments, Pixels and frame buffers, Bresenham's algorithms: line, circle, ellipse generation.
Graphics primitives: Primitive operations, The display-file interpreter, Display-file structure, Display-file algorithms.
Polygons: Polygons representation, An inside test, Filling polygons, Filling with a pattern.
Transformations: Scaling transformations, Reflection and zooming, Rotation, Homogeneous coordinates and translation, Rotation about an arbitrary point.
Segments: The segment table, Segment creation, Closing a segment, Deleting a segment.
Windowing and clipping: The viewing transformation, Clipping, The clipping of polygons, Generalized clipping.
Three dimensions: 3D geometry, 3D primitives, 3D transformations, Parallel projection, Perspective projection, Isometric projections, Viewing parameters, Special projections.
Hidden surfaces and lines: Back-face removal, Back-face algorithms, The Painter's algorithm, Warnock's algorithm, Franklin algorithm, Hidden-line methods.
Light, color and shading: Point-source illumination, Shading algorithms, Shadows, Color models.
Curves and fractals: Curve generation, Interpolation, B splines, Curved surface patches, Bezier curves, Fractals, Fractal lines, Fractal surfaces.

References:

1. Computer Graphics - A Programming Approach by Steven Harrington, McGraw-Hill International Edition, 1987.
2. Schaum's Outline of Theory and Problems of Computer Graphics by Roy A. Plastock and Gordon Kalley, McGraw-Hill Companies, Inc., 1986.
3. Mathematical Elements for Computer Graphics by David F. Rogers adn Adams.

MEC 317 - MECHANICAL ENGINEERING LAB-II

(Effective from the batch admitted during 2006-2007- Credit System)

Periods/week : 3 Pr. Ses. : 50 Exam : 50
Examination (Practical): 3hrs. Credits: 2

1. Load test and smoke test on I.C. Engines.
2. Morse test on multi-cylinder engine.
3. Heat balance sheet on I.C. Engines.
4. Study of multi-cylinder engines and determination of its firing order.
5. Calculations of efficiencies of the given air compressor.
6. Determination of pressure distribution around the given (1) cylinder and (2) airfoil specimens kept in a uniform flow wind-tunnel.
7. Study of automobile mechanisms.
8. Verification of laws of balancing.
9. a) Determination of ratios of angular speeds of shafts connected by Hooke's joint.
   b) Determination of the ratio of times and ram velocities of Withworth quick return motion mechanism.
10. To draw curves of slider displacement and crank angle and linear velocities w.r.t. time for a slider crank mechanism and compare with theoretical values.
11. To determine the relation of gyroscopic couple and compare with the theoretical values.
12. To draw the crank angle vs. pressure diagram for an I.C. engine using pressure transducer and cathode ray oscilloscope.

MEC 318 - MANUFACTURING TECHNOLOGY LAB - II

(Effective from the batch admitted during 2006-2007- Credit System)

Periods/week : 3 Pr. Ses. : 50 Exam : 50
Examination (Practical): 3hrs. Credits: 2

1. Experiments on Lathe to establish the following curves
    a) Depth of cut Vs Cutting force.
    b) Feed Vs Cutting force.
    c) Cutting speed Vs Cutting force.
2. Grinding of single point cutting tool as per given specifications (to check the tool angles).
3. Study of chip formations on shaping machine (with lead sample).
4. Torque measurement on drilling/milling machine.
5. Effect of speed and feed on surface roughness.
6. Measurement of cutting tool temperature in turning.
7. Sieve analysis to evaluate G.F.No.
8. Moisture and clay content test.
9. Green compression and shear test.
10. Shatter Index & Hardness Testing

MEC 319 – SOFT SKILLS LAB.

(Effective from the batch admitted during 2006-2007- Credit System)

Periods/week : 3 Pr Credits: 1

(Common for all Branches of Engineering)

Communication:
Importance of communication
Non verbal communication
Personal appearance
Posture
Gestures
Facial expressions
Eye contact
Space distancing

Goal setting:
Immediate, short term, long term,
Smart goals, strategies to achieve goals

Time management:
Types of time
Identifying time wasters
Time management skills

Leadership and team management:
Qualities of a good leader
Leadership styles
Decision making
Problem solving
Negotiation skills

Group discussions:

Purpose (Intellectual ability, creativity, approach to a problem, solving, tolerance, qualities of a leader)
Group behavior, Analyzing performance

Job interviews:
Identifying job openings
Preparing resumes & CV
Covering letter
Interview (Opening, body-answer Q, close-ask Q),
Types of questions

Reference books:

1. ‘Effective Technical Communications’ by Rizvi M. Ashraf, McGraw–Hill Publication
2. ‘Developing Communication Skills’ by Mohan Krishna & Meera Banerji, Macmillan
3. ‘Creative English for Communication’ by N.Krishnaswami & T.Sriraman, Macmillan
4. ‘Professional Communication Skills’ by Jain Alok, Pravin S.R. Bhatia & A.M. Sheikh, S.Chand & Co.

B.E. (MECH.) - III/IV
(II-SEMESTER)
MEC 321 - FLUID MECHANICS

(Effective from the batch admitted during 2006-2007- Credit System)

Periods/week : 5 Th. Ses. : 30 Exam : 70
Examination (Theory): 3hrs. Credits: 4

Properties of fluids- Introduction-Viscosity- Pressure and its measurement , Absolute, Gauge, Atmospheric and Vacuum pressure – Manometers, Simple manometers, Differential manometers. Hydrostatic forces on surfaces- Total Pressure and Pressure Centre- Vertical, Horizontal, inclined and Curved plane surfaces submerged in liquid- Buoyancy and Floatation.

Fluid Kinematics & Fluid Dynamics: Types of fluid flow- Continuity equation- Velocity potential function and Stream Function- Types of Motion, Linear Translation, Linear deformation,Angular deformation, Rotation, Vorticity and circulation-Vortex flow, forced and Free Vortex – Equation of Motion- Euler's equation - Bernoulli's equation and its applications- Venturimeter, Orifice Meter, Pitot tube-Momentum Equation-Momentum of momentum Equation- Free Liquid Jet- Flow net analysis.

Viscous Flow: Couette flow- Plane Couette flow, Favourable pressure gradient and adverse pressure gradient-Power absorbed in Viscous Flow- Flow through pipes- Hagen Poiseulle flow- Fannigs friction factor- Darcy's Weisbach friction factor- Loss of head due to friction in pipes, Minor Losses and Major losses - Flow through branched pipes- Power transmission through pipes-Two dimensional viscous flow: Navier -Stokes equations and solutions- Order of magnitude analysis- Boundary layer equations.

Laminar Boundary Layer: Definition- Laminar Boundary Layer- **Turbulent Boundary Layer** - Laminar Sub layer- Boundary Layer thickness-Displacement thickness, Momentum thickness and Energy thickness-Momentum integral equation- Flow over a flat plate.

Turbulent Boundary Layer: Laminar- Turbulent transition- Momentum equations and Renold's stresses- Fully developed turbulent flow through a pipe- Turbulent boundary layer on a flat plate- Laminar sub-layer- Boundary layer separation and control.

Dimensional and Modeling Analysis: Fundamental and derived dimensions- Dimensionless groups- Rayleigh method- Buckingham π-theorem- Model Analysis - Types of similarity- Geometric, Kinematic and Dynamic similarities- Dimensionless numbers- Modal Laws- Hydraulic diameter.

Compressible Fluid Flow: Thermodynamic relations- Continuity, Momentum and Energy equations- Velocity of sound in a compressible fluid- Mach number and its significance- Limits of incompressibility- Pressure field due to a moving source of disturbance- Propagation of pressure waves in a compressible fluids- Stagnation properties- Stagnation pressure, Temperature and density- Area velocity relationship for compressible flow- Flow of compressible fluid through nozzles- Condition for maximum discharge through nozzles- Variation of mass flow with pressure ratio- Compressible flow through a venturimeter- Pitot static tube in a compressible flow.

Text Book:

1. Fluid Mechanics and Hydraulic Machines, by R. K. Bansal, Laxmi publications.
2. Fluid Mechanics, by A.K. Mohanty, Prentice Hall of India Pvt.Ltd.

References:

1. Fluid Mechanics and Fluid Power Engineering by Dr. D.S. Kumar, S.K. Kataria &Sons.
2. Foundations of Fluid Mechanics, by Yuan, Prentice Hall of India.
3. Fluid Mechanics and its Applications, by S. K.Gupta and A.K.Gupta, Tata McGraw Hill, New Delhi.
4. Fluid Mechanics and Hydraulic Machines by R. K. Rajput, S.Chand & Co.
5. Fluid Mechanics by Kothandaraman and Rudramoorthy.

MEC 322 - DESIGN OF MACHINE ELEMENTS – I

(Effective from the batch admitted during 2006-2007- Credit System)

Periods/week : 5 Th. Ses. : 30 Exam : 70
Examination (Theory): 3hrs. Credits: 4

Introduction to Mechanical engineering design: traditional design methods, different design models, Problem formulation, Design considerations, engineering materials and processes and their selection, BIS designation of steels, Mechanical properties, Load determination, manufacturing considerations in design.

Design against static loads: Modes of failure, Factory of safety, Axial, bending and torsional stresses, Stress concentration factors. Static failure theories.

Fluctuations and fatigue stresses, Soderberg, Goodman and modified Goodman diagrams, fatigue failure, design consideration in fatigue

Threaded and welded joints: forms of threads, basic types of screw fastenings, ISO metric screw threads, eccentrically loaded bolted joints, Torque requirement for bolt tightening, Fluctuations loads on bolted joints, fasteners, Joints with combined stresses. Power screws, Force analysis. Collar friction, Differential and compound screws design. Types and strength of weld joints subjected to bending and fluctuating loads, cotter and knuckle joints, welded joints, different types welded joints and their design aspects, welding inspection

Shafts, keys and couplings: shafts design on strength basis, torsional rigidity basis, Design of hollow shafts, flexible shafts, ASME codes for shafts, Keys and cotter design, Flat, square keys, Splines, Rigid and flange couplings, Flexible couplings

Spring Design: classification and spring materials, Spring end formation, Design of helical compression springs, helical extension springs, torsion springs, laminated springs, Protective coatings, Equalized stress in spring leaves. Multi - leaf springs. Surge in springs, Nipping and shot peening.

Text Books:

1. Design of Machine Elements by V.B.Bhandari, TMH Publishing Co. Ltd., New Delhi

References:

1. Machine Design by Jain, Khanna Publications.
2. Machine Design by Pandya and Shaw, Charotar publications
3. Machine design , an integrated approach by R.L.Norton, 2nd edition, Pearson Education

MEC 323 - MANUFACTURING TECHNOLOGY – III

(Effective from the batch admitted during 2006-2007- Credit System)

Periods/week : 5 Th Sess. : 30 Exam : 70
Examination (Theory): 3hrs. Credits: 4

Automatic screw lathes, Multi spindle automatic lathes, Turret lathes, Numerical control, NC operation, Coordinate system, Data input devices, Data storage, Programme editing, Machining centres, Turning centres, Vertical turning centres, Milling centres, Advantages of NC, Computers & NC, CNC, DNC, CAD/CAM, Computer graphics, Computer aided manufacturing, Robots, Flexibility in manufacture, Automatic sensing for FMS, Areas affected by FMS, Steps toward automatic factory.

CNC part programming: Designation of co-ordinate axes for CNC machines, Functions of machine control units, Tape format, Manual part programming and computer assisted part programming (using APT language). Exercises involving simple contours and positioning.

ISO system of limits, Fits and Tolerances, Interchangeability, Plain limit gauges, Measurement of screw threads, major diameters, Minor diameters and effective diameter, Pitch, Limit gauges for internal and external threads, Measurement of spur gears, pitch, profile, lead, backlash, tooth thickness.

Tool maker's microscope, Straightness measurement, Slip gauges, Twisted strip mechanical comparator, Optical lever comparator, Optical projector, Electric comparator, Pneumatic comparator, Squareness testing, Optical bevel protractor, Sine bar, Angle gauges, Precision level, Autocollimeter,

Angle dekkor, Optical dividing heads and rotary tables, Flatness measurement, Roundness measurement. Co-ordinate measuring machines.
Surface texture: Parameters, sampling length, Specification, Stylus instruments for surface roughness measurement. Acceptance tests on machine tools: Lathe, Milling machine, Radial drill, Laser equipment.

Text Books:
1. Process & Materials of Manufacture, R.A.Lindberg, 4th edition, Prentice-Hall of India, New Delhi.
2. A Text Book of Engineering Metrology, I.C.Gupta, Dhanpat Rai & Sons, Delhi.
3. CNC and Computer Aided Manufacturing, T.K.Kundra, P.N.Rao & N.K.Tewari, Tata McGraw-Hill Publishing Company Ltd, Delhi.

References:
1. A.S.T.M.E., Hand book of Industrial Metrology, Prentice-Hall of India, New Delhi.
1. A.S.T.M.E., Hand book of Manufacturing Engineering.
2. Manufacturing Processes & Materials for Engineers, L.E.Doyle & others, Prentice-Hall of India, New Delhi.
3. Manufacturing Technology by Adithan, New age international.

MEC 324 - INDUSTRIAL ENGINEERING AND MANAGEMENT

(Effective from the batch admitted during 2006-2007- Credit System)

Periods/week : 5 Th Ses. : 30 Exam : 70
Examination (Theory): 3hrs. Credits: 4

Concepts of Industrial Management: Principles of management- Growth of management thought, Functions of management, Principles of organization, Types of organization and committees.
Introduction to personnel management- Functions, Motivation, Theories of motivation, Hawthrone studies, Discipline in industry, Promotion, Transfer, lay off and discharge, Labour turnover.
Industrial relations- Trade unions, Industrial disputes, Strikes, Lock-out, Picketing, Gherao, Settlement of industrial disputes, Collective bargaining, Industrial dispute act 1947 and factories act 1948.
Production Planning and Control: Types of productions, Production cycle, Product design and development, Process planning, Forecasting, Loading, Scheduling, Dispatching, Routing, Progress, Control, Simple problems.
Plant Layout: Economics of plant location, Rural Vs Suburban sites, Types of layouts, Types of building, Travel chart technique, Assembly line balancing simple problems.
Materials Handling- Principles, Concept of unit load, Containerization, Pelletization, Selection of material handling equipment, Applications of belt conveyors, Cranes, Forklift trucks in industry.
Plant Maintenance: Objectives and types.
Work Study: Concept of productivity, Method Study - Basic steps in method study, Process charts, Diagrams, Models and Templates, Principles of motion economy, Micro motion study, Therbligs, SIMO chart. Work Measurement - Stop watch procedure of time study, Performance rating, allowances, Work sampling, Simple problems.
Materials Management: Introduction, Purchasing, Objectives of purchasing department, Buying techniques, Purchase procedure, Stores and material control, Receipt and issue of materials, Store records. Inventory Control, EOQ model(Simple problems).
Quality Control - Control charts of variables and attributes (Use of formulae only). Single and Double sampling plans.

Text Book:
1. Industrial Engineering Management, by Dr. O. P .Khanna.

References:

1. Principles of Management by Koontz & Donnel.
2. Production and Operations Management by Everette Adam & Ronald Ebert.
3. Operations Management by John McClain & Joseph Thames.
4. Industrial Engineering and Production Management by Telsay, S. Chand & Co.

MEC 325 - ENGINEERING THERMODYNAMICS-III

(Effective from the batch admitted during 2006-2007- Credit System)

Periods/week : 5Th Ses. : 30 Exam : 70
Examination (Theory): 3hrs. Credits : 4

I.C. engines: classification-comparison of two stroke and four stroke engines- comparison of S.I. and C.I. engines-Air cycles-Otto, Diesel, Dual, Stirling, Ericson and Atkinson cycles and their analysis-Valve timing and port timing diagrams- Efficiencies- air standard efficiency,indicated thermal efficiency, brake thermal efficiency, mechanical efficiency, volumetric efficiency and relative efficiency-Testing and performances of I.C. engines-Basic principles of carburetion and fuel injection.
Combustion in I.C. Engines: S.I. engines- Normal combustion and abnormal combustion-Importance of flame speed and effect of engine variables-types of abnormal combustion pre-ignition and knock, Fuel requirements and fuel rating, anti-knock additions- Combustion chamber requirements and Types of combustion chamber- Design principles of combustion chambers-C.I. engines- Stages of combustion- Delay period and its importance- effect of engine variables, diesel knock, suction compression and combustion induced turbulence, open and divided combustion chambers.
Reciprocating and Rotary Compressors: Reciprocating compressors-effect of clearance in compressors, volumetric efficiency-single stage and multi stage compressors-effect of inter cooling in multi stage compressors-Vane type blower-centrifugal compressor- Adiabatic efficiency- Diffuser-Axial flow compressors- Velocity diagrams, degree of reaction, performance characteristics.
Gas Turbines: Simple gas turbine plant- Ideal cycle, closed cycle and open cycle for gas turbines-Efficiency, work ratio and optimum pressure ratio for simple gas turbine cycle- Parameters of performance- Actual cycle, regeneration, Inter-cooling and reheating, closed and semi-closed cycle-Jet propulsion and Rockets.
Nuclear power plants: Classification of reactors-Thermal utilization-Fuels, Fuel moderator and coolant, Control and safety rods, Special properties of structural materials required, Induced radio-activity-Gas cooled reactors, Radiation hazards and shielding-Radio active waste disposal.
Direct Energy Conversions and non conventional energy sources: Solar Energy- Introduction, Solar radiation, Solar collectors, Energy storage-Wind Energy- Wind mills-Thermo Electric- MHD.

Text Books:

1. A Treatise on Heat Engineering by Vasandhani and Kumar.
2. Applied Thermodynamics-II by R. Yadav.

References:

1. Thermal Engineering, by R.K.Rajput.
2. I.C. Engines, by Mathur and Nehata.
3. Gas Turbines, by Cohen and Rogers.
4. Fluid Flow Machines, by M.S. Govinda Rao, Tata McGraw Hill publishing company Ltd.
5. I.C. Engines by V. Ganesan.
6. Power Plant Engineering, P.K.Nag
7. Non Conventional Energy Sources, G.D.Rai
8. Internal Combustion Engines by R.K. Mohanty, Standard Book House.

MEC 326 - ELECTIVE – II

(A) GAS TURBINES AND JET PROPULSIONS

(Effective from the batch admitted during 2006-2007- Credit System)

Periods/week : 5Th Ses. : 30Exam : 70

Examination (Theory): 3hrs. Credits: 4

Introduction: Development- Competition- Competition Rules- Present and Future Status- Gas Turbine Problems.

The Fundamentals of Gas Turbines: Introduction- Conservation of Mass Continuity Equation- Conservation of Energy (First Law of Thermodynamics)- Momentum Equation- Sonic Velocity, Mach Number and Mach Waves-Stagnation Temperature, Pressure and Enthalpy- Isentropic Flow Through a Passage of varying cross sectional Area- Normal Shock- Equations for Normal Shock – Governing Equations- Impossibility of a Refraction shock- Strength of Shock wave- Shocks in a converging, Diverging Nozzle.

Ideal Power Plant Cycles: Introduction- Carnot Cycle- Stirling Cycle with Regenerator-Ericsson Cycle- The Joule Air Cycle- Brayton Cycle- Brayton Cycle with Regeneration- Complex Cycle- The Close Cycle- Operating Media other than Air.

Performance of a Actual Gas Turbine Cycles: Efficiency of the compressor and Turbine- Pressure or Flow Losses- Heat Exchanger Effectiveness- Effect of varying mass Flow-Loss due to incomplete combustion- Mechanical Losses- Effect of Variable Specific Heat- Calculation of Fuel consumption and cycle Efficiency- Polytrophic Efficiency- Performance of Actual Cycles.

Centrifugal Compressors: Introduction-Components- Method of Operation- Theory of Operation- Ideal Energy Transfer- Actual Energy Transfer-Slip- Analytical Methods of Determining σ- Power Input Factor- Pressure Coefficient- Compressors Efficiency- Inlet or Inducer Section, When Entrance is Axial, Sizing of Inducer Section, Prewhirl- Impeller Passage, The Effect of Impeller Blade Shape on Performance, The Impeller Channel- The Compressor Diffuser- Losses in Centrifugal Compressors- Compressor Characteristics- Surging and Choking.

Axial Flow Compressors: Introduction- Description- Principles of Operation- Performance Analysis- Momentum or Filament Analysis, Special Velocity Diagrams, Symmetric Stage, Non-Symmetric Axial -in flow, Non-Symmetric Axial- outflow- Actual Energy Transfer- Air Foil Analysis, One Dimensional Ideal Incompressible Flow, Two Dimensional flow With Friction- Blading Efficiency, Losses in terms of Air Angles and Drag Co efficient- Coefficient of Performance, Flow Coefficient (Φ), Pressure Coefficient (ψ_p),Work Coefficient(Ω)- Blade Loading- Cascade Characteristics-Blade angles- Reynolds and Mach Number Effects- Three Dimensional flow Analysis, Radial Equilibrium Theory, Free Vertex Blades, Constant Reaction Blades, Forced Vortex of Solid Rotation Blades, The General Design -Three Dimensional Blades Losses- Compressor Stall and Surge - Overall Performance- Compressor Characteristics.

Combustion Systems: Introduction- Combustion Mechanism- Pressure Losses- Combustion Intensity- Combustion Efficiency- Requirements of the Combustion chamber- Shape of the Combustion chamber- Stabilizing or Primary Zone- Dilution and Mixing- Combustion- Chamber Arrangements- Fuel Injection System.

Axial Flow Gas Turbines: Introduction- Description- Turbine and Nozzle efficiencies- Degree of Reaction, Ideal Impulse Turbine, Impulse Turbine with Loss, Blades Speed Ratio, Velocity Ratio and Torque, Velocity Compound Turbine (Curtits Stage)- The Reaction Turbine- Three Dimensional Flow Analysis, The Free Vortex Blades

Regenerator- Introduction--Types of Regenerators- Heat Transfer in Direct type Exchanger, Exchanger Heat Transfer Effectiveness, Number of Exchanger Heat Transfer Units- Effect of Flow Arrangement, Effect of Cmin/Cmax<1for a Regenerator- Rotary heat Exchangers.

Jet Propulsions: Introduction-The Ramjet Engine-The Pulse-jet Engine- The Turbo-jet Engine- Thrust Equation—Specific Thrust of the Turbo Jet Engine- Efficiencies- Inlet Diffuser or Ram Efficiency- thermal Efficiency of the TurboJet Engine- Propulsive Efficiency- Overall Efficiency of a Propulsive system- Effect of Forward Speed- Effect of Attitude- Overall Turbojet Process- Thrust augmentation- The After burn-Injection of Water, Alcohol Mixtures- Bleed- Burn Cycles.

Text Books:

1. Gas Turbines and Propulsive Systems by P.R. Khajuria and S.P. Dubey, Dhanpat Rai & Sons

Reference Books:

1. Gas Dynamics and Jet Propulsion By Murugaperumal, SCITECH Publications.

(B) AUTOMOBILE ENGINEERING

(Effective from the batch admitted during 2006-2007- Credit System)

Periods/week : 5Th Ses. : 30Exam : 70

Examination (Theory): 3hrs. Credits: 4

Introduction: Definition of automobile, Automobile Layout, Chassis and Transmission: Introduction to Drive Train: Clutch, Gearbox, Hook's Joint, Propeller /Drive Shaft, Slip Joint, Final Drive and Differential, Front and Rear Axles, Wheels and Tires, Control systems: Introduction to Steering, and Brakes. Electrical system: Introduction to Starting System, Ignition, dynamo/alternator, cut-out and wiring. Automobile Body: Parts and Stream lining, Automobile types: Front, Rear and Four wheel drive and Automotive materials.

Engine (Power Plant): Multi cylinder engine parts, Classification: 'In-line' and 'V' type, Multi-Valve Engines, VCR Engines, Super Charging/Turbo charging, Air filters, Fuel Systems: Petrol Engines: Carbureted and MPFI, Ignition Systems: Conventional and Electronic, Diesel Engines: Conventional, CRDI, and Duel Fuel engines., Performance, Combustion and Exhaust Emissions, Air pollution and their control: EGR and Catalytic Converters, EURO/Bharat Stage Norms: I, II, III, IV and V., Manifolds and Mufflers, Engine Cooling and Lubrication.

Clutch: Necessity, Clutch Assembly: Construction and Working Principle, Types: Single and Multiple Plates, Free-Play, Fluid coupling/Torque converter, Clutch Troubles and Remedies.

Gearbox: Necessity of Transmission and Transaxle, Construction and Working Principle, Selector Mechanism, Types: Sliding mesh, Constant mesh, Synchromesh, and Epicyclical. Three, Four and Five- Speed Gearbox, Overdrive, Automatic Gearbox, Gearbox Troubles and Remedies.

Drive shaft and Final Drive: Drive Shaft: Constructional Features: Universal/Hooks Joints, Slip Joint, and Working Principle., Types of Propeller shafts, Final drive and Differential: Necessity, Constructional Features and Working Principle., Front/Rear Axles: Constructional Features and Types of Rear Axle Floating, Wheels: Disc and Drum type, Tires: Tire Construction, Tube and Tubeless Tires, Radial Tires, Tire specification, Tire rotation and Tire Maintenance.

Suspension System and Vehicle Control: Coil and Leaf Springs, Shock absorbers, Wheel alignment: Kingpin angle, Caster, Camber, Toe-in, and Toe-out., Necessity of vehicle control, Steering Mechanism and its Elements: Steering gear box and its types, Steering gear ratio, Constant Velocity Joints and linkages. Power Steering, Brake system: Necessity, Parking and Power Brakes, Parts and Working Principle of Mechanical, Air and. Hydraulic Brakes: Mater and Wheel cylinder, Properties of Brake Fluids, Brake Diagnostics and Service: Brake Bleeding, Anti-lock Braking System, Automobile Accessories and Tips for Safe Driving.

Electrical and Electronic Systems: Basics of Electrical/Electronic Systems: Battery, Starting system, Charging System, Lighting and Signaling System, A/C Electrical System, Electronic Engine Management system, Automotive Embedded Systems: Vehicle Security System and Working Principle of Computer Sensors: Temperature, Flow, Cam, knock, and Oxygen, and ECU/ ECM.

Trouble Shooting and Maintenance: Engine and Vehicle Troubles: Diagnostic Information: Symptom descriptions and their Causes and Remedies, Periodic, Preventive and Break down Maintenance: Engine tuning, Fuel and Air filters, Lubricants, Maintenance of Battery and Electrical/Electronic System, and Tires. The Motor Vehicle Act (India).

Text Books:

1. Automotive Mechanics (10/e) - William H. Crouse and Donald L. Anglin, Tata McGraw-Hill Publishing Company Limited, ISBN: 0-07-059054-0
2. Automobile Engineering – KK Jain/ RB Asthana, Tata McGraw-Hill Publishing Company Limited, ISBN: 0-07-044529-X

3. Internal Combustion Engines and Air Pollution- E.F. Obert, Harper & Row International Publishers Inc., ISBN: 0-06-350561-4

Reference Books:

1. Automotive Mechanics – S. Srinivasan, Tata McGraw-Hill Publishing company Limited, ISBN: 0-07-044941-6
2. Internal Combustion Engines – Heywood, John, B. McGraw-Hill Publications Limited.
3. Automotive Engines- S Srinivasan, Tata McGraw-Hill Publishing Company Limited, ISBN: 0-07-040265-5

(C) TOOL DESIGN

(Effective from the batch admitted during 2006-2007- Credit System)

Periods/week: 5Th Ses. : 30Exam: 70
Examination (Theory): 3hrs. Credits: 4

Locating and Clamping Devices: Principles of Jigs and Fixtures design-Locating principles-Locating elements-Standard parts-Clamping devices-Mechanical actuation-Pneumatic & hydraulic actuation-Analysis of clamping forces-Tolerance and error analysis.
Jigs & Fixtures: Drill bushes-Different types of Jigs-Plate latch, channel, box, post, angle plate, angular post, turnover, pot jigs- Automatic drill jigs-Rack & Pinion Operated, Air operated Jigs Components.
General principles of lathe, milling and broaching fixtures-Grinding, Drilling and shaping fixtures, Assembly, Inspection and Welding fixtures-Modular fixtures. Design and development of Jigs and fixtures for simple components.
Press Tools: Press working terminology-Presses and Press accessories-Computation of capacities and tonnage requirements-Design and development of various types of cutting, forming and drawing dies.
Tool Design for Numerically Controlled Machine Tools: Fixture Design for Numerically Controlled Machine Tools, Cutting Tools for Numerical Control, Tool-holding Methods for Numerical Control
Design of Limit Gauges: Elements, types and application of limit gauges, Gauge materials, their selection, Taylor's principles of gauge design, Types and methods to provide gauge tolerances. Design steps and design of plug & ring / snap gauge for given dimension and application.

Text Books:

1. Donaldson. C, Tool Design, Tata McGraw-Hill, 1986
2. "ASTME Handbook of Fixture Design ". Prentice Hall of India Pvt. Ltd.
3. Basu, Mukherjee, Mishra, Fundamentals of Tool Engg. Design, Oxford & IBH Publishing, N. Delhi

References:

1. A. K. Goroshkin, " Jigs and Fixtures Handbook ", Mir Publishers, Moscow, 1983.
2. "Die Design Handbook ", Ivana Suchy, McGraw Hill Book Co., 2005.
3. Production technology, HMT, Tata McGraw Hill.
4. P. Eugene Ostergaard, "Basic Die Making" - Mc Graw Hill Book, 1963.
5. Principle of Machine Tool. Sen & Bhattacharya, New Central Book Agencies, 1975.
6. Production tooling equipments S. N. Parsons, Macmillan, 1966. |

(D) PRODUCTION PLANNING AND CONTROL

(Effective from the batch admitted during 2006-2007- Credit System)

Periods/week : 5Th Ses. : 30Exam : 70

Examination (Theory): 3hrs. Credits: 4

Production Planning and Control: Introduction-Definition-Functions of PPC- Objectives-Terminology- Types of Production-Production Control Department in Relation to Types of Production.

Forecasting: Introduction- Statistical forecasting techniques- Moving average-Exponential smoothing technique-Errors in forecasting and evaluation of fore casting techniques.

Process Planning, Computer aided Process Planning: production Control Procedures-Order, Flow , Load and Block types of Control-Production control Organization-Place and Significance of Production control Department in an Industry.

Inventory Management: Introduction-Definition - Types of Inventory - EOQ and EBQ Models with and without shortages - Buffer stock, Re-order Level- Inventory control techniques - Make or buy decision - Material requirement planning- MRP-II- JIT.

Planning: Engineering aspects-Aggregate Planning- Master Processing instructions- Identification Systems- Production inventory programs- work design and job design-
Routing-Steps in routing- Rout sheet.

Scheduling: Forward and Backward Scheduling- Master Scheduling- Evaluation of Job Shop Schedules with reference to Priority Scheduling rules, Sequencing, Assignment techniques in Production Scheduling.

Dispatching and Expediting: Centralized and Decentralized Dispatching- Functions in Dispatching-Dispatching policies- Progress reports- Gantt Load Charts and Schedule Charts- Use of components for production control other information processing systems- Computers in PPC

Text Books:

1. Joseph and Mork - Operations Management.
2. Donald Denmar - Management of Industrial Organization.
3. Moor and Deblonke - Production Control
4. Temokhna. J. A and White - Facilities Planning**.**
5. Everette.Adam, Jr. and Ronald J. Ebert- Production and Operation Management

References:

1. Production Planning and Inventory Control, Narasimhan, Mc Leavy, Billington, PHI(1999)
2. Operation Management- Strategy and Analysis, Lee Krajewski and Larry P. Ritzman, Addison-Weslely (2000).
3. Operations Management : Theory and Problems by Monk, J.G., McGraw Hill, NY, 1985.
4. Computer Aided Production Management, P. B. Mohapatra, PHI (2001)
5. Manufacturing Planning and Control Systems by Vollmann, Thomas, E. and Others, Richard D. Irwin, Illinois, 1984.
6. Service Operations Management by Fitzsimmons, J.A. and Sullivan, R.S., McGraw Hill, NY, 1982.
7. Materials Management by Ammer, Dean, S., Richard D. Irwin, Illinois, 1962.

(E) ROBOTICS

(Effective from the batch admitted during 2006-2007- Credit System)

Periods/week : 5Th Ses. : 30 Exam : 70
Examination (Theory): 3hrs. Credits: 4

Introduction: Background- Historical Development-Robot Arm kinematics and Dynamics-Manipulator Trajectory Planning and Motion Control-Robot Sensing- Robot Programming Language-Machine Intelligence.

Robot Arm kinematics: Introduction – The Direct Kinematics Problem-The Inverse Kinematics Solution.

Robot Arm Dynamics: Introduction – Lagrange-Euler Formulation- Newton-Euler Formation - Generalized D'Alemberts Equations of Motion.

Planning of Manipulator Trajectories: Introduction-General Considerations on Trajectory Planning- Joint Interpolated Trajectories- Planning of Manipulator Cartesian Path Trajectories.

Control of Robot Manipulators: Introduction – Control of the Puma Robot arm- Computed Torque Technique- Near Minimum Time Control- Variable Structure Control- Nonlinear Decoupled Feedback Control- Resolved Motion Control- Adaptive Control.

Sensing: Introduction-Range Sensing-Proximity Sensing- Touch Sensors- Force and Torque Sensing.

Low-Level Vision: Introduction –Image acquisition- Illumination Techniques- Imaging Geometry-Some Basic Relationship Between Pixels – Preprocessing.

Robot Programming Languages: Introduction- Characteristics of Robot Level Languages-Characteristics of Task Level Languages.

Text Book:

1. Robotics By K.S. Fu, R.C. Gonzalez and C.S.G Le, McGraw- Hill International Editions1987.

Reference Books:

1. Industrial Robotics By M.P.Groover,Mitchell Weiss, Roger N. Nagel and N.G.Odrey, McGraw-Hill International Editions1986.
2. Robot Analysis- The Mechanics of Serial and Parallel Manipulators By Lung-Wen Tsai, Jhon Wiley and Sons,Inc

(E) MECHATRONICS

(Effective from the batch admitted during 2006-2007- Credit System)

Periods/week : 5Th Ses. : 30Exam : 70
Examination (Theory): 3hrs. Credits: 4

Mechatronics system design: Introduction to Mechatronics: What is mechatronics, Integrated design issues in mechatronics, Mechatronics key elements, The mechatronics design process, Advanced approaches in mechatronics.

Modelling and simulation of physical systems: Simulation and block diagrams, Analogies and impedance diagrams, Electrical systems, Mechanical translational systems, Mechanical rotational systems, Electromechanical coupling, Fluid systems.

Sensors and transducers: An introduction to sensors and transducers, Sensors for motion and position measurement, Force, torque and tactile sensors, Flow sensors, Temperature-sensing devices. Actuating devices: Direct current motor, Permanent magnet stepper motor, Fluid power actuation.

Signals, systems and controls: Introduction to signals, systems and controls, System representation, Linearization of nonlinear systems, Time delays.

Real time interfacing: Introduction, Elements of a data acquisition and control system, Overview of the I/O process, Installation of the I/O card and software.

Advanced applications in mechatronics: Sensors for condition monitoring, Mechatronic control in automated manufacturing, Artificial intelligence in mechatronics, Microsensors in mechatronics.

Text Book:

1. Mechatronics System Design by Devdas Shetty and Richard A. Kolk, P.W.S. Publishing Company, 2001.

References:

1. Mechatronics by W. Bolton, Pearson Education, Asia, II-Edition, 2001
2. Introduction to Mechatronics and Measurement Systems by David G. Alciatore and Michael B. Histand, Tata McGraw Hill Company Ltd.

MEC 327 - METROLOGY LAB./MECHATRONICS LAB.

(Effective from the batch admitted during 2006-2007- Credit System)

Periods/week : 3 Pr. Sess. : 50 Exam : 50

Examination (Practical): 3hrs. Credits: 2

METROLOGY LAB. EXPERIMENTS - (Any Five)

1. Calibration of the following instruments: (using slip gauges)
   i. Calibration of Micrometer. ii. Calibration of Mechanical Comparator.
   iii. Calibration of Vernier Caliper. iv. Calibration of Dial Gauge.
2. Measurement of taper angle using
   i. Bevel Protractor ii. Dial Gauge iii. Sine-Bar iv. Auto-Collimator.
3. Alignment tests:
   i. Parallelism of the spindle ii. Circularity & Concentricity of the spindle
   iii. Trueness of running of the spindle.
4. Gear parameters Measurement
   i. diameter, pitch/module ii. Pitch circle diameter iii. Pressure angle iv. Tooth thickness.
5. Check the flatness of a surface plate.
   i. Using spirit level ii. Using Auto-collimator
6. Using light wave interference:
   i. Study of flatness of slip gauges ii. To find the height of a slip gauge.
7. Tool Maker's Microscope:
   i. Establish the thread details ii. To find the cutting tool angles.
8. Miscellaneous:
   i. To find the diameter of a cylindrical piece ii. Taper angle of a V-block
   iii. Central distance of two holes of a specimen.

MECHATRONICS LAB. EXPERIMENTS - (Any Five)

I. Training on Programmable Logic Controller (any ONE of the Following)
   i) Lift Control Using Ladder Logic Programme
   ii) Traffic Signal Control using Ladder Logic Programme

II. Training on Programmable Logic Controller - Sensor Training Kit
   a) Proximity Switch
   b) Photo Electric Switch
   c) Limit Switch

III. Training on Sensor and Transducer (any ONE of the Following)
   i). Linear position or Force applications
      a. LVDT (Linear variable differential transformer)
      b. The strain gauge Transducer
   ii). Rotational Speed or Position Measurement (The inductive Transducer)
   iii). Linear or Rotational Motion
      a. D.C. Solenoid
      b. D.C. Relay

IV. Training on Automation Studios
   i). Punch Machine operation
   ii). Hydraulic Cylinder operation

V. Training on Material Handling
VI. Training on any Controller Package
VII. Training on Servo Fundamental Trainer.

MEC 328 - INDUSTRIAL ENGINEERING LAB

(Effective from the batch admitted during 2006-2007- Credit System)

Periods/week : 3 Pr. Ses. : 50 Exam : 50
Examination (Practical): 3hrs. Credits: 2

List of Experiments:

1. To measure the skill and dexterity in the movement of Wrist and Fingers using pin board.
2. To measure the Heart beat using Stethoscope.
3. To show that the sample means from a normal universe follow a normal distribution.
4. To draw the control chart for fraction defective for a given lot of marble balls.
5. To determine the cycle time using PMTS.
6. To draw two handed process charts for
    i. Bolt, Washer and nut assembly
    ii. Assembly of electric tester.
7. To study the changes in heart rate for different subjects using Tread mill.
8. To draw Multiple Activity chart using an electric toaster.
9. To determine the percentage utilization using work sampling.
10. To study the process capability of a given process.
11. To measure the Heart rate during working and recovery periods of the subjects under different loads, using Bicycle ergometer.
12. To draw flow process charts on activities in Workshop/ Laboratory/Office.
13. To determine the time required to perform motion sequence using work factor system.
14. To draw SIMO charts for
    i. Ball point pen assembly
    ii. Electric plug assembly.
15. To conduct time study of the bulb holder assembly operation of the existing method.
16. To collect the anthropometrics data using `Anthropolometer'.

MEC 411 – DESIGN OF MACHINE ELEMENTS - II

(Effective from the batch admitted during 2006-2007- Credit System)

Periods/week: 5 Th. Ses. : 30 Exam :70
Examination (Theory): 3hrs. Credits : 4

Classification of gears. Standard tooth systems. Spur, Helical, Bevel and Worm gears. Terminology of each. Tooth failure. Face width an beam strength. Lewis equation. Design for dynamic and wear loads. Force analysis of Bevel and Worm gears. Thermal design considerations of worm gears.

Engine parts: I.C. engine design. Design of cylinders and heads. Design of pistons. Design of cross-head, connecting rods and crank shafts.

Friction clutches. Torque capacity multi-plate clutches. Design considerations. Energy considerations and Temperature rise friction materials. Centrifugal clutches. Brakes. Energy equations. Band and block brakes. Internal expanding shoe brakes, self locking, brake design.

Sliding contact bearings. Lubrication modes. Temperature effect on viscosity. Journal bearing design. Bearing modulus. McKee equations. Heating of bearings. Collar and thrust bearings. Roller and ball bearings. Static and dynamic load capacity. Equivalent bearing load. Load-life relationships. Load factor. Selection of bearings from manufacturers catalogue.

Design of crane hooks, Wire rope construction and classification. Stresses in wire ropes. Design for service like lifts and winches. Chain drives, Nomenclature: Brief outline and simple applications of composite materials.

Text books:

1. Design of Machine Elements by V.B. Bhandari, TMH publishing Co. Ltd., New Delhi.

References:

1. Machine Design by R.K. Jain, Khanna publications.
2. Mechanical Engineering Design by Joseph E. Shingley.

MEC 412 – HEAT AND MASS TRANSFER

(Effective from the batch admitted during 2006-2007- Credit System)

Periods/week: 5 Th. Ses. : 30 Exam :70
Examination (Theory): 3hrs Credits : 4

Introduction: Basic modes of heat transfer- Rate equations- Generalized heat conduction equation in Cartesian, Cylindrical and Spherical coordinate systems.

Steady state heat conduction solution for plain and composite slabs, cylinders and spheres- Critical thickness of insulation- Heat conduction through fins of uniform and variable cross section- Fin effectiveness and efficiency.

Unsteady steady state heat conduction- Transient heat conduction- Lumped system analysis, and use of Heisler charts.

Convection: Continuity, momentum and energy equations- Dimensional analysis- Boundary layer theory concepts- Free, and Forced convection- Approximate solution of the boundary layer equations- Laminar and turbulent heat transfer correlation- Momentum equation and velocity profiles in turbulent boundary layers- Application of dimensional analysis to free and forced convection problems- Empirical correlation.

Radiation: Black body radiation- radiation field, Kirchoff's laws- shape factor- Stefan Boltzman equation- Heat radiation through absorbing media- Radiant heat exchange, parallel and perpendicular surfaces- Radiation shields.
Heat Exchangers: Types of heat exchangers- Parallel flow- Counter flow- Cross flow heat exchangers- Overall heat transfer coefficient- LMTD and NTU methods- Fouling in heat exchangers- Heat exchangers with phase change.
Boiling: Different regimes of boiling- Nucleate, Transition and Film boiling. Condensation: Laminar film condensation- Nusselt's theory- Condensation on vertical flat plate and horizontal tubes- Dropwise condensation.
Mass Transfer: Conservation laws and constitutive equations- Isothermal equimass, Equimolal diffusion- Fick's law of diffusion- diffusion of gases, Liquids- Mass transfer coefficient.

Text Books:

1. Heat Transfer, by J.P.Holman, Int. Student edition, McGraw Hill book company.
2. Analysis of Heat transfer, by Eckert and Drake, Int.Student edition, McGraw Hill Kogakusha Ltd.

References:

1. Heat and Mass Transfer by R.K. Rajput, S. Chand & Co.
2. Heat and mass transfer by Sachjdeva.
3. Heat and mass transfer by Kothandaramanna, New Age International.

MEC 413 – FLUID MACHINERY AND SYSTEMS

(Effective from the batch admitted during 2006-2007- Credit System)

Periods/week: 5 Th. Ses. : 30 Exam :70
Examination (Theory): 3hrs. Credits : 4

Impact of jet and jet propulsion: Impact of jet on stationary surfaces- Impact of jet on hinged surfaces- A moving curved vane high tangential entry of water- Radial flow over the vanes- Jet propulsion.
Hydraulic Turbines: Classification- Pelton wheel- Reaction turbines- Inward and outward radial flow reaction turbines- Fancis turbine- Axial flow reaction turbine- Kaplan turbine- Draft tube- Types- Theory- and efficiency of draft tube.
Specific Speed: Determination- Significance- Unit quantities- Unit speed- Unit discharge and unit power- Characteristic curves of hydraulic turbines- Constant heat curves- Constant speed curves and Iso-efficiency curves- Governing of turbines.
Centrifugal Pumps: Main parts- Efficiency- Minimum speed for starting- Multi-stage centrifugal pumps- Specific speed of a centrifugal pump- Priming of a centrifugal pump- Characteristic curves- Main, Operational and constant efficiency curves- Cavitation- Effects- Cavitation in Hydraulic machines.
Reciprocating Pumps: Main parts- Classification- Velocity and acceleration variation in suction and delivery pipes due to piston acceleration- Effect of variation of velocity on friction in suction and delivery pipes- Effect of acceleration in suction and delivery pipes on indicator diagram- Effect of friction- Maximum speed of reciprocating pump- Air vessels.
Hydraulic Press- Hydraulic accumulator- Differential hydraulic accumulator- Hydraulic intensifier- Hydraulic ram- Hydraulic lift- Hydraulic crane- Fluid coupling- Hydraulic torque converter. Servo systems- Open and closed loop systems- Hydraulic and Pneumatic systems-

Fluid power components- Fluidics- Efficiency of a fluidic device- Proportional or analog devices- Vortex diode, Vortex triode, Counting, Fluidic systems- Digital devices.

Text Book:

1. Fluid Mechanics and Hydraulic Machinery, by R.K.Bansal, Laxmi publications.

Reference:

1. Fluid Flow Machines, by N.S.Govinda Rao, Tata McGraw Hill publishing company Ltd.

MEC 414 – STATISTICAL QUALITY CONTROL

(Effective from the batch admitted during 2006-2007- Credit System)

Periods/week: 5 Th. Ses. : 30 Exam :70
Examination (Theory): 3hrs. Credits : 4

Introduction to quality, definitions, Taguchi's loss function, examples of off-line and on-line quality control techniques, quality costs, Deming's philosophy, introduction to six sigma concept.

Shewart's normal bowl, control charts for variables, $\bar{X}$, R and sigma control charts, theory of runs, ARL and ATS, Type-I and Type-II errors

Control charts for attributes, p-chart, standardized p –chart, np-chart, c-chart, u-chart, demerit control chart.

Process capability analysis: using frequency distribution and control charts. Process capability ratios, C_p and C_{pk} Process capability ratios for nominal the batter type, smaller the better type and larger the better type product specifications.

Sampling palns: single, double, multiple and sequential sampling plans, rectifying inspection, AOQ, AOQL, and ATI. Use of Dodge Romig Tables, Design of single and sequential sampling plans.

Text Books:

1. Introduction to statistical quality control by E.L. Grant
2. Introduction to statistical quality control by D.C. Montgomery

MEC 415 - ELECTIVE - III

MEC 415(C) – Computer Numerical Control and Computer Aided Manufacturing

(Effective from the batch admitted during 2006-2007- Credit System)

Periods/week: 5 Th. Ses. : 30 Exam :70
Examination (Theory): 3hrs. Credits : 4

Introduction to CNC and CAM, CNC retrofitting, Adoptive control machining, NC part program preparation through computer languages. Group technology: Merits & demerits, Organisation, Classification and Coding systems, Facilities layout.

Computer aided process planning: Introduction to process planning, Methods of process planning, Computer aided process planning, CAPP systems, case studies.

Computer aided material handling and production planning: Robots: Structure and operation of Robots, robot sensors and applications. Automatic conveyor systems. Automated guided vehicles. Aid of computer in production planning and control, Inventory control and material requirement planning.

Computer aided inspection and quality control: Developments and practice, Quality assurance and quality control. Coordinate measuring machine. Non-contact inspection.
FMS & CIMS: Building blocks of Flexible Manufacturing Systems (FMS), Machining systems of FMS, Tool management systems, Advantages of FMS, Computer integrated manufacturing systems (CIMS).

Text Books:

1. Computer Aided Manufacturing, by P.N.Rao, N.K.Tewari & T.K.Kundra, Tata McGraw-Hill publishing company Ltd, NewtDelhi.
2. Automation, Production Systems and Computer Integrated Manufacturing, by Mikell P.Groover, Prentice-Hall of India Pvt. Ltd.

Reference:

1. Computer Integrated Design and Manufacturing, by David D.Bedworth, Mark R.Henderson & Philip M.Wolfe, McGraw-Hill Book Company, Singapore.

MEC 415 - ELECTIVE - III
MEC 415(D) – TOTAL QUALITY MANAGEMENT

(Effective from the batch admitted during 2006-2007- Credit System)

Periods/week: 5 Th. Ses. : 30 Exam :70
Examination (Theory): 3hrs. Credits : 4

Concepts of TQM: Philosophy of TQM, Customer focus, Organization, Top management commitment, Team work, Quality philosophies of Deming, Crossby and Muller.
TQM process: QC tools, Problem solving methodologies, New management tools, Work habits, Quality circles, Bench marking, Strategic quality planning.
TQM systems: Quality policy deployment, Quality function deployment, Standardization, Designing for quality, Manufacturing for quality.
Quality system: Need for ISO 9000 system, Advantages, Clauses of ISO 9000, Implementation of ISO 9000, Quality costs, Quality auditing, Case studies.
Implementation of TQM: Steps, KAIZEN, 5S, JIT, POKAYOKE, Taguchi methods, Case studies.

References:

1. Total Quality Management by Rose, J.E., Kogan Page Ltd., 1993.
2. The Essence of Total Quality Management by John Bank, PHI, 1993.
3. Beyond Total Quality Management by Greg Bounds, Lyle Yorks et al, McGraw Hill, 1994.
4. The Asian Productivity Organization by Takashi Osada, 1991.
5. KAIZEN by Masaki Imami, McGraw Hill, 1986.

MEC 415 - ELECTIVE - III

MEC 415(E) – OPTIMIZATION OF DESIGN

(Effective from the batch admitted during 2006-2007- Credit System)

Periods/week: 5 Th. Ses. : 30 Exam :70

Examination (Theory): 3hrs. Credits : 4

Introduction to Optimization: Engineering applications of optimization- Statement of an optimization problem- Classification of optimization problem- Optimization techniques.

Classical Optimization Techniques: Single variable optimization- Multivariable optimization with equality constraints- Multivariable optimization with inequality constraints.

Nonlinear Programming: One-Dimensional Minimization: Unimodal function- Elimination methods- Unrestricted search- Exhaustive search- Dichotomous search- Fibonacci method- Golden section method- Interpolation

methods- Quadratic interpolation method- Cubic interpolation method- direct root method.

Nonlinear Programming: Unconstrained Optimization Techniques: Direct search methods- Random search methods- Univariate method- Pattern search method- Rosenbrock's method of rotating coordinates- The simplex method- Descent methods- Gradient of function- Steepest descent method- Conjugate gradient method (Fletcher-Reeves method)- Quasi-Newton methods- Variable metric method (Davidon- Fletcher-Powell method).

Nonlinear Programming: Constrained Optimization Techniques: Characteristics of a constrained problem- Direct method- The complex method- Cutting plane method- Methods of feasible directions- Indirect methods- Transformation techniques- Basic approach in the penalty function method- Interior penalty function method- Convex programming problem- Exterior penalty function method.

Geometric programming (G.P): Solution of an unconstrained geometric programming, differential calculus method and arithmetic method. Primal dual relationship and sufficiency conditions. Solution of a constrained geometric programming problem (G.P.P). Complimentary geometric programming(C.G.P)

Dynamic programming(D.P): Multistage decision processes. Concepts of sub optimisation, computational procedure in dynamic programming calculus method and tabular methods. Linear programming as a case of D.P., Continuous D.P.

Integer programming(I.P): Graphical representation. Gomory's cutting plane method. Bala's algorithm for zero-one programming problem. Integer non linear programming.

Text Book:

1. Optimization Theory and Applications, by S.S.Rao, Wiley Eastern Limited, New Delhi.

References:

1. Optimization of Design of Machine Elements, by R.C.Johnson.
2. Computer Aided Analysis and Design of Machine Elements, by Rao V.Dukkipati, M.Ananda Rao and R.B.Bhat.
3. Engineering optimization methods and applications, by G.V.Reklaits, A.Ravindarn and K.M.Ragsdell, by Publications John Wiley and Sons.

MEC 415 - ELECTIVE - III
MEC 415(F) – ENGINEERING TRIBOLOGY

(Effective from the batch admitted during 2006-2007- Credit System)

Periods/week: 5 Th. Ses. : 30 Exam :70
Examination (Theory): 3hrs. Credits : 4

Introduction: history, industrial significance, different types of bearings,
Properties and testing of lubricants: viscosity, viscometry, effect of temperature and pressure on viscosity, physical properties of mineral oils, generalized Reynolds's equation
Engineering surfaces – properties and measurements: different measuring methods, statistical description, fractal description
Surface contact: Non –confirming Surface contact geometry, stresses in Non –confirming Surface, contact of surface roughness, numerical surface contact models
Adhesion, Friction, Wear: adhesion models, factors influencing adhesion, stiction, various types of frictions, laws of wear, types of wear, minor forms of wear, methods for reduction of wear and friction and ferrography, surface engineering
Boundary lubrication: Liquid lubrication, fluid film lubrication, liquid and solid lubricants, properties of lubricants, typical lubricant tests, additives, Fluid film lubrication
Bearings: hydrodynamic thrust bearings, hydrodynamic journal bearings, hydrodynamic squeeze film bearings, hydrostatic bearings, gas lubricated bearings and rolling element bearings and antifriction bearing, Nano tribology

Text books:

1. Introduction to triobology of bearings, B.C. Majumdar, a.h. wheelers and co
2. Engineering triobology, Prasanta Sahu, Prentice - Hall of India, 2005
3. Fundamentals of Tribology, S.K.Basu, s.N. Sengupta and B.B.Ahuja, Prentice - Hall of India, 2005

MEC 417 - HEAT AND MASS TRANSFER LAB

(Effective from the batch admitted during 2006-2007- Credit System)

Periods/week : 3 Pr. Ses. : 50 Exam : 50
Examination (Practical): 3hrs. Credits: 2

List of Experiments:

1. Study of conduction phenomena in the composite slab system.
2. Determination of emmissivity, time constant, Fouries Biot module and study of variation of temperature with respect to time on a circular disc.
3. Study of heat transfer by forced convection through a horizontal test section.
4. Study of heat transfer by forced convection through a vertical test section.
5. Determination of free convective heat transfer coefficient from a horizontal cylinder in air.
6. Determination of thermal conductivity of brass employing it as a fin.
7. Tests on natural convection and pool boiling.
8. Study of forced convection with turbulence promoters.
9. Study of condensation on fin.
10. Tests on film condensation.
11. Determination of COP of a vapour compression refrigeration system.
12. Study of vapour compression air conditioning system.

MEC 418 – FLUID MECHANICS AND MACHINERY LAB

(Effective from the batch admitted during 2006-2007- Credit System)

Periods/week : 3 Pr. Ses. : 50 Exam : 50

Examination (Practical): 3hrs. Credits: 2

List of Experiments:

1. Calibration of flow meters,
    a. Venturi meter
    b. Orifice meter
    c. Nozzle meter
2. Determination of coefficient of discharge for
    a. small orifice
    b. cylindrical mouth piece
3. Finding coefficient of discharge for
    a. rectangular notch
    b. triangular notch
    c. trapezoidal notch
4. To draw the performance characteristics of C.F. pump.
5. To find the specific speed of
    a. Pelton turbine
    b. Francis turbine
6. To draw the characteristic curves for reciprocating pump.
7. To draw the pressure distribution and finding coefficient of drag for
    a. a bluff body
    b. an Aero foil
8. To draw the characteristic curves for the hydraulic ram.

MEC 421 – INSTRUMENTATION AND CONTROL SYSTEMS

(Effective from the batch admitted during 2006-2007- Credit System)

Periods/week: 5 Th. Ses. : 30 Exam :70

Examination (Theory): 3hrs. Credits : 4

Instrumentations: Concepts of measurements, static performance, characteristics accuracy of measurement and its analysis. Instrumentation, for measurement: Force, torque, strain. pressure, flow, temperature and vibration.

Optical Methods of Measurement: Introduction, Laser beam as a light pointer, length/displacement measurement, temperature sensors, seismographic measurement.

Introduction to fiber optics, fiber types, properties of optical fibres and a fibre optic sensor configuration.

Introduction: Control systems, Feedback and its effects. Transfer Function, Block Diagram and Signal Flow Graph: Impulse response and Transfer functions of linear systems, Block diagrams.

Mathematical Modeling of Physical Systems: Equations of electrical networks, Modeling of mechanical system elements, Equations of mechanical systems. State-variable Analysis of Linear Dynamic Systems: Matrix representation of state equations, State transition matrix, State transition equation, relationship between state equations and high-order differential equations, relationship between state equations and transfer functions, Characteristic equation, eigen values and eigen vectors.

Time-Domain Analysis of Control Systems: Typical test signals for the time response of control systems, Time- domain performance of control systems- The steady- state error, Time-domain performance of control systems- Stability of control systems- stability, Characteristic equation and the state transition matrix, Methods of determining stability of linear control systems, Routh- Hurwitz criterion.
Frequency-domain Analysis of Control Systems: Introduction, Nyquist stability criterion, Application of the Nyquist criterion, Stability of multi loop systems, Stability of linear control systems with time delays.

Text Books:

1. Automatic Control Systems, by Benjamin C. Kuo.
2. Mechanical Measurements, by R.S.Sirohi, H.G. Radha Krishna, Wiley Eastern, New Delhi.

References:

1. Experimental Methods for Engineers, by J.P.Holman, McGraw-Hill.
2. Instrumentation for Engineering Measurements, by R.H. Cerni and L.E.Foster, J.Wiley & Sons, New York.
3. Mechanical and Industrial Measurement, by R.K.Jain, Khanna publishers, Delhi.
4. Control Systems Engineering by Nagrath/Gopal ,New age international.

MEC 422 – COMPUTER AIDED DESIGN

(Effective from the batch admitted during 2006-2007- Credit System)

Periods/week: 5 Th. Ses. : 30 Exam :70
Examination (Theory): 3hrs. Credits : 4

Fundamentals of CAD - Introduction - The design process - Application of computers for design - Operating systems - Hardware in CAD: The design work station - I/O Devices - CAD system configuration - Creating database for manufacturing - Benefits of CAD.
Interactive Computer Graphics - Graphic display devices- Graphics system- Graphics standards - Graphical user interface- Transformation systems- windowing - clipping - 2D and 3D transformations - Linear transformation- Display files for 3D data - Geometric Modeling - Modeling Techniques - Wire frame Modeling - Surface Modeling - 3 D Solid Modeling.
Introduction to Finite Element Analysis - CAD techniques to finite element data preparation- Automatic mesh generation- presentation of results - 3-dimensional shape description and mesh generation- CAD applications of FEM.
CAD applications and exposure to CAD packages: Simple examples of computer aided drafting, design and analysis - Introduction to simple machine elements - Analysis of cross sectional area, centroid & moment of inertia- Kinematics of crank- slider mechanism and other simple design applications. Introduction to CAD packages like ANSYS, NASTRON, NISA-II.
Introduction to Artificial Intelligence Introduction to Artificial Intelligence - Applications of AI in design and CAD.

Text Books:

1. CAD/CAM- Computer Aided Design & Manufacturing, by M.D.Groover & E.W.Zimmer.
2. Computer Aided Design and Manufacturing, by Dr.Sadhu Singh, Khanna Publishers.

References:

1. Computer Aided Design in Mechanical Engineering, by V.Rama Murthy.
2. Elements of Computer Aided Design & Manufacturing, by Y.C.Pao.
3. Computer Aided Kinetics for Machine Design, by D.L.Ryan.
4. Computer Aided Design and Manufacturing, by C.B.Besant & C.W.K.Lui.
5. Computer-Aided Analysis & Design by S. Ghosal, Prentice Hall of India.
6. CAD/CAM/CIM by Radhakrishna, New age international.

MEC 423 – ENGINEERING ECONOMICS

(Effective from the batch admitted during 2006-2007- Credit System)

Periods/week: 5 Th. Ses. : 30 Exam :70
Examination (Theory): 3hrs. Credits : 4

Utility, value, wealth, consumption, wants, necessaries, comforts and luxuries. laws of demand, elasticity of demand.
Production, agents of production, laws of returns. Forms of business organization. Single trader, partnership and public limited company.
Price determination in perfect competition, monopoly and imperfect competition. Rent, interest, money, cheques, bills of exchange.
Costing- Cost concepts, Elements of cost, Methods of distribution of overhead costs. Unit costing, Job costing and process costing.
Break- Even analysis, Depreciation methods, Preparation of profit and loss account and balance sheet (Outlines only).

Text Book:

1. Engineering Economics, Vol.1, Tara Chand.

References:

1. A Text book of Economic Theory by Dhingra and Garg.
2. Cost Accounts by Shukla and Grewal.

MEC 424 - PROJECT

(Effective from the batch admitted during 2006-2007- Credit System)

Periods/week : 6 Pr. Ses. : 50 Exam : 50
Credits: 8

Project topic to be decided by the guide/department.

MEC 425 - COMPUTER AIDED DESIGN LAB

(Effective from the batch admitted during 2006-2007- Credit System)

Periods/week : 3 Pr.	Ses. : 50	Exam : 50
Examination (Practical): 3hrs.		Credits: 2

CAD experiments:

1. Initiating the graphics package; Setting the paper size, space; setting the limits, units; use of snap and grid commands.
2. Drawing of primitives (line, arc, circle, ellipse, triangle etc.)
3. Drawing a flange.
4. Drawing a Bushing assembly.
5. Dimensioning the drawing and adding text.
6. Setting the layers and application of the layers.
7. Isometric and orthographic projections.
8. Viewing in Three dimensions.
9. Removal of hidden lines - Shading and rendering.

CAM experiments:

1. Preparation of manual part programming for CNC turning/Milling.
2. Part programming preparation through AutoCAD.
3. APT part programming for 2D - contour.
4. Machining of one job on CNC machine tool.
5. Robot programming through Teaching Box method.
6. Robot programming through computer.

MODEL QUESTION PAPER

B.E. IV/IV MECHANICAL – I SEMESTER
(Common to Mechanical and MPIE)
OPERATIONS RESEARCH

Time : 3 Hrs. Max. Marks : 70

Answer question No. 1 and
Answer any FOUR questions from remaining.
Assume suitable missing data wherever necessary.
Answers to question No.1 must be at one place.
All questions carry marks.

1. a) State the condition for cycling to occur in simplex method.
   b) What is a traveling salesman problem?
   c) State the conditions required for processing of n jobs on m machines.
   d) What is independent breakdown replacement?
   e) State the major difference between pure strategy and mixed strategy in game theory.
   f) How do you evaluate standard deviation for a networks.
   g) What are uncontrolled variables in inventory problems?
2. a) Define and explain optimum solution and feasible solution of a L.P.P.
   b) Use simplex method to

   Maximize $z = 7x_1 + 5x_2$
   Subject to $x_1 + 2x_2 \leq 6$
   $4x_1 + 3x_2 \leq 12$
   and $x_1, x_2 \geq 0$
3. a) For the following transportation problem, obtain a basic feasible solution by Vogel's approximation:

		DESTINATION			
		A	B	C	Capacity
ORIGIN	I	40	20	210	2
	II	80	35	160	6
	III	240	190	40	8
	Demand	8	4	4	

   b) What is an assignment problem? Explain the 'Hungarian' method of solving it.
4. Find the sequence that minimizes that total elapsed time required to complete the following tasks. Each job is processed in the order A C B:

		Jobs						
		1	2	3	4	5	6	7
Time on Machine	A	12	6	5	11	5	7	6
	B	7	8	9	4	7	8	3
	C	3	4	1	5	2	3	4

5. Compute the economic lot size, the associated total cost and the length of time between two orders, given that the set up cost is Rs.100/-, the daily holding cost per unit of inventory is 5 paise and the daily demand is 30 units. Derive the formulae used.
6. A special purpose machine costs Rs. 1 lakh, annual operation and maintenance cost is Rs.1,000/- and increases at a rate of Rs.750/- for 2nd and 3rd year and at a rate of Rs.1250/- for the remaining life. The life of equipment is 10 years. Salvage value at the end of first year is Rs.80,000/- and falls at a rate of Rs.10,000/- every year for the

first 4 years. After words it has no salvage value. What should be economic life of lathe if the rate of return on capital invested is 25%?.

7. a) Explain how a 2-person zero-sum game can be solved by linear programming.
   b) Determine the optimum strategies for the following 4 × 4 game:

		B			
		I	II	III	IV
A	I	4	1	8	5
	II	2	8	2	6
	III	–2	0	4	2
	IV	1	7	3	3

8. Consider a project for which the following activities and the time estimates have been obtained:

Activity (a, b, m)		Activity (a, b, m)	
1, 2	(5, 8, 6)	3, 6	(3, 5, 4)
1, 4	(1, 4, 3)	4, 6	(4, 10, 8)
1, 5	(2, 5, 4)	4, 7	(5, 8, 6)
2, 3	(4, 6, 5)	5, 6	(9, 15, 10)
2, 5	(7, 10, 8)	5, 7	(4, 8, 6)
2, 6	(8, 13, 9)	6, 7	(3, 5, 4)
3, 4	(5, 10, 9)		

Draw the network to determine the probability of the project getting completed as per schedule.

MODEL QUESTION PAPER

B.E. IV/IV MECHANICAL ENGINEERING – II SEMESTER

(Mechanical only)

MCH-424 Elective – II : OPTIMIZATION OF DESIGN

Time : 3 Hrs. Max. Marks : 70

Answer question No. 1 and any FOUR questions from the remaining.

Assume suitable missing data wherever necessary.

Answers to question No.1 must be at one place.

All questions carry equal marks.

1. Answer all the following:

(7 × 2 = 14)

   a) State five engineering applications of optimization.
   b) Define a saddle point and indicate its significance.
   c) What is an interval of uncertainty and what is a pivot operation?
   d) Why is refitting necessary in interpolation methods?
   e) What is the difference between the interior and extended interior penalty function?
   f) What is normality condition in a geometric programming problem?
   g) Give two engineering examples of a discrete programming problem.

2. a) Consider the following optimization problem

Maximize $f = -x_1 - x_2$

Subject to $x_1^2 + x_2 \geq 2$

$4 \leq x_1 + 3x_2$

$x_1 + x_2^4 \leq 30$

Find whether the design vector $X = \begin{Bmatrix} 1 \\ 1 \end{Bmatrix}$ satisfies the Kuhn-Tucker conditions for a constrained optimum.

b) What are the values of the Lagrange multipliers at the given design vector?

3. Minimize the function:

$$f = x_1 - x_2 + 2x_1^2 + 2x_1x_2 + x_2^2$$

starting from the point $X_1 = \begin{Bmatrix} 0 \\ 0 \end{Bmatrix}$ along the direction $S = \begin{Bmatrix} -1 \\ 0 \end{Bmatrix}$ using the quadratic interpolation method with an initial step length of 0.1.

4. a) Show that the Newton's method finds the minimum of a quadratic function in one iteration.

b) Given the algorithm of Dividon-Fletcher-Powell (DFP) method of optimization of non linear unconstrained optimization problem.

5. Minimize $f(x_1, x_2) = x_1^2 + x_2^2 - 2x_1 - x_2$

Subject to $g_1(x_1, x_2) = x_1 + 4x_2 - 5 \le 0$

$g_2(x_1, x_2) = 2x_1 + 3x_2 - 6 \le 0$

$g_3(x_1, x_2) = -x_1 \le 0$

$g_4(x_1, x_2) = -x_2 \le 0$

Starting from the point $X_1 = \begin{Bmatrix} 1.0 \\ 1.0 \end{Bmatrix}$, using gradient projection method.

6. a) Formulate the problem of determining the cross-sectional dimensions of the cantilever beam subjected to a load at the free end for its minimum weight. The maximum permissible bending stress is σ_y.

b) Define a complementary geometric programming problem.

7. A vessel is to be loaded with three types of items. The maximum allowable weight is 7. The weight per unit of different items and their values are given below. It is required to find the loading which maximizing the values of the vessel without exceeding the weight constraint of 7.

Item	Weight/unit	Value per unit
1	1	20
2	3	90
3	2	70

8. Solve the following problem using Gomary's cutting plane method.

Maximize $f = 6x_1 + 7x_2$

Subject to $7x_1 + 6x_2 \le 42$

$5x_1 + 9x_2 \le 45$

$x_1 - x_2 \le 4$

$x_i \ge 0$ and integer $i = 1, 2$.

MODEL QUESTION PAPER

B.E. IV/IV MECHANICAL ENGINEERING – II SEMESTER

(Common with MPIE)

MCH-423 COMPUTER AIDED DESIGN

Time : 3 Hrs. Max. Marks : 70

Answer question No. 1 and

Answer any FOUR questions from remaining.

Assume suitable missing data wherever necessary.

Answers to question No.1 must be at one place.

All questions carry equal marks.

1. a) Name some CAD system input devices
   b) What is a Programmable controller?
   c) Explain what is meant by an Operating system?
   d) What are the various Mass storage devices?
   e) What is windowing and clipping?
   f) Name the languages that are commonly used in AI. What is inference engine?
   g) Name some popular CAD packages for FEA. What are the application fields of FEA?
2. a) What are the different tasks involved in engineering design? explain each one of them in detail.
   b) Distinguish between hardware and software. what are the advantages of cad workstation? discuss briefly the working of workstation.
3. a) What are graphics standards? Why standards are necessary for computer graphics? Explain various graphics standards.
   b) Explain the need for modeling in CAD and discuss the geometric modeling with suitable examples. Distinguish between wire frame modeling and solid modeling.
4. a) Explain 3 dimensional transformations with examples.
   b) Describe the transformation, which reflects an object about a line L. Perform a 30º rotation of a triangle A(0.0), B(1,1), C(5,2); (i)About the origin and (ii) about P(-1, -2).
5. a) Explain the concept of FEA and FEM modeling.
   b) Explain the process of assembly of element matrices as applicable in FE model.
6. a) Explain 3–dimensional shape description and mesh generation.
   b) Compare the pre and post processing capabilities of three different FEA software packages.
7. Explain the important steps in the development of a program for design and manufacture of a simple plate Cam. Give flow chart and expected output.
8. a) How do you locate centroid and moment of inertia of an object in CAD? Explain it through an example.
   b) What are the applications of Artificial Intelligence in CAD?

MODEL QUESTION PAPER
B.E. III/IV (MECHANICAL ENGINEERING)
II SEMESTER (2001-2002)
DESIGN OF MACHINE ELEMENTS – II

Time : 3 Hrs.
Max. Marks : 70

NOTE : Answer question No. 1 and
Answer any FOUR questions from remaining.
All questions carry marks.
Assume suitable missing data wherever necessary.
Data books <u>are not</u> allowed.
Answers to question No.1 must be at one place.

(2 × 7)

1. a) What is conjugate action in gears?
   b) What are the causes of dynamic loads coming on gear tooth?
   c) Distinguish between crossed helical gears and Herringbone gears.
   d) Why I-section is generally selected for connecting rods?
   e) Why are ball and roller bearings called as anti-friction bearings?
   f) Why a plate clutch having two pairs of contact surfaces is termed a single plate clutch?
   g) What are the two main methods of wire rope construction? Mention relative advantages.
2. a) What are the advantages of Helical gears over Spur gears? (4)
   b) A pair of parallel helical gears consists of 24 teeth pinion rotating at 10000 rpm and transmitting 2.5 KN power to a gear. The speed reduction is 4:1. The normal pressure angle and helix angle are 20º and 23º respectively. Both gears are made of hardened steel with Sut = 600 N/mm^2. The service factor and factor of safety are 1.5 and 2 respectively. The gears are manufactured for an accuracy of grade-6 condition given by $e = 8 + 0.63\,\phi$ and $\phi = mn + 0.25\sqrt{d}$, where mn is normal module and d is p.c.d. Determine the dynamic load and effective load. What is the surface hardness for a Fj = 2? (10)
3. a) What are whipping stresses in a connecting rod? (4)
   b) Design a connecting rod for a 4-cylinder IC engine having a piston of 100 mm dia, connecting rod length of 313 mm, stroke of piston of 125 mm, normal running speed of 1200 rpm and over speed of 2000 rpm. The maximum explosion pressure in the cylinder is 2.8 N/mm^2. The weight of reciprocating parts is 11 N. Allowable stress for the material of the connecting rod = 330 N/mm^2, while the bolt stress 500 N/mm^2. Sketch and show the dimensions designed. (10)
4. a) How are the two theories of uniform pressure and uniform wear are applicable to the friction surface of a clutch plate? (4)
   b) An automotive single-plate clutch consists of two pairs of contacting surfaces. The OD of the friction disc is 270 mm. The coefficient of friction is 0.3 and the maximum intensity of pressure is 0.3 N/mm^2. The clutch is transmitting a torque of 531 N-m. Assuming uniform wear, determine the inner diameter and the axial force required to keep the clutch engaged. (10)
5. a) What is self-locking in brakes? (4)
   b) An internal-expanding shoe brake shown in figure has a face width of 50 mm and coefficient of friction of 0.4. The maximum intensity of pressure allowed is 0.8 N/mm^2. Determine the actuating force and the torque capacity of the brake. (10)

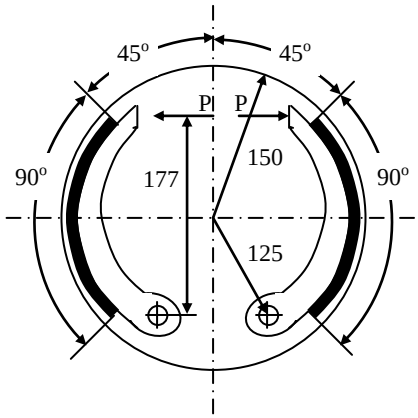

Dim. in mm.

6. a) Distinguish between thick film lubrication and thin film lubrication. What is bearing modulus? (4)
   b) The radial load in a full hydrodynamic bearing is 25 KN and journal speed is 900 rpm. The unit bearing pressure is 2.5 MPa, bearing has an L/D ratio of 1:1. The viscosity of the lubricant is 20 Cp and radial clearance of 0.15 mm. Determine the bearing dimensions and cooling oil rate of flow. (10)
7. a) What are bending stresses in wire ropes? Explain the term "Slicing" of ropes. (4)
   b) Wire ropes of 6 × 19 type with tensile designation 1230 and nominal diameter 10 mm are used for a hoist. The mass of wire rope is 345 N per 100 m, while the braking load is 38 KN. The weight of hoist along with the material is 10 KN, which is raised through a distance of 3 m. The maximum acceleration during operation is limited to 1 m/sec^2. Neglecting bending stress, determine the number of ropes required if Fs = 10. (10)
8. a) What is chordal action in chain drivers? (4)
   b) A simple roller chain No. 10 B is used to drive a line shaft from an electric motor which runs at 1400 rpm while the line shaft rotates at 350 rpm. The number of teeth on the driving sprocket wheel are 19. For smooth operation without shock, determine the rated power capacity, tension in the chain and factor of safety based on breaking load. Given power rating of 10 B chain as 11.07 KW, Ks = 1, K_1 = 1 and K_2 = 1.11.

MODEL QUESTION PAPER
B.E. IV/IV MECHANICAL – I SEMESTER
(Common to Mechanical and MPIE)
HEAT AND MASS TRANSFER

Time : 3 Hrs. Max. Marks : 70

Answer question No. 1 and
Answer any FOUR questions from remaining.
Assume suitable missing data wherever necessary.
Answers to question No.1 must be at one place.
All questions carry marks.
Heat transfer data book is permitted.

1. a) Determine the thermal conductivity of a plate with area A = 0.5 m^2 and thickness L = 0.02 m with its surfaces maintained at 60º C and 20º C. Given net heat is 70 KW. Find the thermal conductivity of the plate.
   b) Define Biot and Fourier numbers.
   c) What is Reynolds-Colburn's analogy.
   d) Draw the temperature distribution in a double pipe heat exchanger when operated under parallel flow and counter flow conditions.
   e) State Fick's law of diffusion and define various symbols used and give their units.
   f) Differentiate between mechanisms of heat transfer by forced and free convection.
   g) Define monochromatic and total emission power of a body.
2. a) The thermal conductivity of a material varies as $K = K_0(1 + aT + bT^2)$ while K_0, a, b are constants and T is the temperature in ºC. Obtain an expression for the thermal resistance per unit surface area of a plane wall constructed from this material.
   b) A copper cable of 25 mm diameter has an electrical resistance of 0.005 ohm/m and it is used to carry an electrical current of 250 amps. The cable is exposed to ambient air at 20ºC and the associated convection coefficient is 25 w/m^2K. What are the surface and center line temperatures of the copper cable? The thermal conductivity of copper is 380 w/mK.
3. a) Define fin efficiency and fin effectiveness. Obtain an expression for fin efficiency for an insulated tip condition.
   b) A long cylindrical aluminium pipe of diameter 100 cm initially at a temperature of 773 K has air stream at 373 K blown over it. For the pipe, density ρ = 2707 kg/m^3, specific heat C_p = 896 J/kg K and thermal conductivity K = 204 w/mK, convective heat transfer coefficient h = 80 w/m^2K. Determine the time required for the pipe to reach 473 K.
4. a) Air at 20º C and atmospheric pressure is flowing past a flat plate at a velocity of 3 m/sec. The plate is heated over its entire length to a uniform temperature of 60ºC. Calculate t he heat transfer from the first 30 cm length of the plate (Assume total length of the plate 1 m). Also estimate the drag force exerted on the first 30 cm length of the plate. Use the analogy between fluid friction and heat transfer.
   b) Define bulk mean temperature in a tube flow.
5. a) Estimate the heat transfer from a 40 W incandescent bulb at 125ºC to quiescent air at 25ºC. Approximate the bulb as a sphere of 50 mm diameter. What percent of the power is lost by free convection? Use the correlation:
   $$Nu = 0.60(Gr.Pr)^{0.25}$$
   b) Water flows through a tube of 2 cm diameter at a rate of 90 lit/hr. Determine whether the flow is laminar or turbulent. Also estimate the entrance length. [Take the kinematic viscosity of water as 1×10^{-6} m^2/sec].

6. a) Prove that the intensity of radiation is given by $I_b = \frac{E_b}{\pi}$.

   b) An enclosure measures 1.5 m × 1.75 m with a height of 2 m. Under steady state equilibrium conditions, the walls and ceiling are maintained at 525 K and floor at 400 K. Determine the net radiation to floor.

      $\in_1$ (emissivity of ceiling and walls) = 0.85

      $\in_2$ (emissivity of floor) = 0.75.

7. a) A parallel flow heat exchanger is to be designed to cool oil (C_p = 2.0 KJ/kg K) from 125ºC to 85ºC by the flow of water. The water flows at the rate of 75 kg/min and gets heated from 40ºC to 75ºC. What heat exchanger area is required for an overall heat transfer coefficient of 0.35 kW/m^2 K? A change in the operating conditions occur for the same heat exchanger and the water flow rate drops to 50 kg/min for the same oil flow rate. Work out the exit temperature of the oil and water under the changed conditions.

   b) Show that effectiveness $\in = \frac{NTU}{1+NTU}$ for counter flow heat exchanger.

8. a) Saturated steam at a pressure of 100 KPa condenses on the outside surface of a horizontal pipe of 2 cm diameter. The surface temperature of the pipe is maintained at a temperature of 94.37ºC by circulating water through it. Determine the amount of steam condensed per hour, per meter of the tube length.

   b) Explain the phenomenon of nucleate boiling. List the factors that affect the nucleate boiling.

MODEL QUESTION PAPER

B.E. IV/IV MECHANICAL – I SEMESTER

FLUID MACHINERY & SYSTEMS

Time : 3 Hrs. Max. Marks : 70

Answer question No. 1 and

Answer any FOUR questions from remaining.

Assume suitable missing data wherever necessary.

Answers to question No.1 must be at one place.

1. a) Write short note on jet propulsion. (7 × 2)

   b) What is draft tube? Write down its applications.

   c) Define the terms

      i) specific speed

      ii) unit speed

      of a turbine.

   d) What is priming? Why it is necessary?

   e) What is the function of an air vessel in reciprocating pump?

   f) Explain two methods adopted to convert kinetic energy of water into pressure energy in a centrifugal pump.

   g) Explain the working of hydraulic accumulator.

2. a) Derive the expression for the force exerted by the jet on stationary inclined flat plate. (6)

   b) A 7.5 cm diameter jet having a velocity of 30 m/s strikes a flat plate, the normal of which is inclined at 45º to the axis of the jet. Find the normal pressure on the plate (i) when the plate is stationary, (ii) when the plate is moving with a velocity of 15 m/s

and away from the jet. Also determine the power and the efficiency of the jet when the plate is moving. (8)

3. a) What is reaction turbine? How does it differ from an impulse turbine? Give examples of each. (4)

   b) A 137 mm diameter jet of water issuing from a nozzle impinges on the buckets of a Pelton wheel and the jet is deflected through an angle of 165º by the buckets. The head available at the nozzle is 400 m. Assuming coefficient of velocity as 0.97, speed ratio as 0.46, and reduction in relative velocity while passing through buckets as 15%, find the power developed. (10)

4. a) What is governing of turbines? Why it is necessary? What is the effect, if the turbines are not governed? (5)

   b) The hub diameter of a Kaplan turbine, working under a head of 12 m, is 0.35 times the diameter of the runner. The turbine is running at 100 rpm. If the vane angle of the extreme edge of the runner at outlet is 15º, and the flow ratio 0.6, find

      i) diameter of the runner

      ii) discharge through the runner.

   The velocity of whirl at outlet is given as zero. (9)

5. a) Make a note on characteristic curves of hydraulic turbines under constant head. (6)

   b) A turbine is to operate under a head of 25 m at 200 rpm. The discharge is 9 m^3/sec. If the efficiency is 90%, determine the performance of the turbine under a head of 20 m. (8)

6. a) Define cavitation. What are the effects of cavitation in hydraulic machines? (6)

   b) The internal and external diameters of the impeller of a centrifugal pump of 20 cm and 40 cm respectively. The pump is running at 1200 rpm. The vane angles of the impeller at inlet and outlet are 20º and 30º respectively. The water enters the impeller radially and velocity of flow is constant. Determine the work done by the impeller per kg of water. (8)

7. a) Explain the working of single acting reciprocating pump with a neat sketch. (5)

   b) A single acting reciprocating pump has piston diameter 12.5 cm, and stroke length 30 cm. The center of the pump is 4 m above the water level in the sump. The diameter and length of suction pipe are 7.5 cm and 7 m respectively. The separation occurs if the absolute pressure head in the cylinder during suction stroke falls below 2.5 m of water. Calculate the maximum speed at which the pump can run without separation. Take atmospheric pressure head as 10.3 m of water. (9)

8. a) Make a note on closed loop servo system. (7)

   b) Explain the working of a hydraulic torque converter unit. (7)

MODEL QUESTION PAPER
B.E. III/IV MECHANICAL – I SEMESTER
ENGINEERING ECONOMICS
(Common for Mechanical and MPIE)
From 1999-2000 admitted batch

Time : 3 Hrs.
Max. Marks : 70

NOTE : Answer Part 'A' and any FOUR questions from Part 'B'.
All questions carry marks.
Missing data if any may be assumed suitably.
Answers to Part 'A' must be at one place.

PART – A

1. a) Explain the difference between utility and usefulness with an example.
   b) Define the "Law of demand".
   c) Distinguish between private limited company and public limited company.
   d) What is meant by imperfect competition.
   e) What are different kinds of overheads?
   f) Graphically show a break even point.
   g) What a trading account shows?

PART – B

2. What is elasticity of demand? Explain various methods of estimating elasticity of demand.
3. Explain the features, advantages and disadvantages of single proprietary concern and partnership.
4. Explain how price is determined under monopoly.
5. Explain various theories of interest and how rate of interest is determined under these theories.
6. Explain the concepts of unit costing and job costing.
7. What is Depreciation? What are various methods of depreciation?
8. From the following Trial Balance of M/s Srikrishna Enterprises prepare final accounts for the year ending on 31st March, 2000.

Dr. balances	Rs.	Cr. balances	Rs.
Bank	7,500	Capital	2,00,000
Purchases	34,96,000	Bills payable	50,000
Salaries	21,000	Loan	1,00,000
Carriage on sales	2,500	Sales	36,00,000
Carriage on purchases	2,000	Discount	2,000
Lighting	1,500	Commission	500
Buildings	1,35,000	Sundry creditors	1,00,000
Rent and Taxes	2,000		
Sundry debtors	40,000		
Furniture	30,000		
Cash in hand	1,250		
Bills receivable	7,500		
Op. stock	3,06,250		

MODEL QUESTION PAPER-Mechanical Engineering

M.E. (INDUSTRIAL ENGINEERING) - EVENING COURSE - III SEMESTER

IE 301E TOTAL QUALITY MANAGEMENT

(Four-Semester Evening Course -Credit System- w.e.f. 2007-2008)

Time : 3 Hrs. Max. Marks : 70

Answer any FIVE questions.

All questions carry equal marks.

1. Describe the total quality management philosophy.
2. What is the role of top management in setting a road map for quality improvement in an organization?
3. What are the advantages of using quality function deployment? What are the key ingredients that are necessary for its success?
4. What are the different types of quality audits? Discuss each and identify the context in which they are used.
5. Discuss the emerging role of ISO 9000 standards in the global economy.
6. Describe the steps of benchmarking relative to a company of your choice.
7. a) State the merits and demerits of JIT production system.
   b) Explain quality circles.
8. Answer any THREE of the following:
   a) Kaizen.
   b) Taguchi method.
   c) QC tools.
   d) Quality policy.
   e) Designing for quality.

MODEL QUESTION PAPER

IV/IV B.E Mechanical Engineering

Statistical Quality Control

Time: 3 Hrs. Max. Marks: 70

Question No. 1 is compulsory and to be written at one place

Answer any FOUR from the remaining

All questions carry equal marks

Use of statistical tables is allowed

1. (a) Distinguish between quality loss and quality cost.
   (b) What is ‘off-line’ quality control?
   (c) How type-I error is controlled?
   (d) What is a run with respect to a control chart?
   (e) Give two examples for nominal the better type product specifications.
   (f) What is process capability ratio?
   (g) Mention the difference between ATI and ASN.
2. (a) Explain the concept of six sigma. (4)
   (b) An $\bar{X}$ chart with three sigma limits has parameters as follows:

   UCL = 104

   CL = 100

   LCL = 96

   n = 5

Suppose the process quality characteristic being controlled is normally distributed with a true mean of 98 and a standard deviation of 8. What is the probability that the control chart would exhibit lack of control by at least the third point plotted? (10)

3. (a) What is the basis for using 3-sigma limits in control charts? Do you justify the same for attribute control charts? (7)

(b) A fraction nonconforming control chart is to be established with a centre line of 0.01 and two-sigma control limits. How large should the sample size be if the lower control limit is to be nonzero? (7)

4. (a) Explain the construction and use of demerit control chart. (7)

(b) A control chart for defects per unit ***u*** uses probability limits corresponding to probabilities of 0.975 and 0.025. The central line on the control chart is at ***u'* = 2.0.** Determine the position of the control limits when ***n* = 5.** (7)

5. (a) How do you estimate the process capability index using a control chart? (6)

(b) The roughness of the ground surface of a component can not exceed 0.02 units. A random sample of components ground by a surface-grinding machine yielded the following estimates:

Mean roughness = 0.01 units

Standard deviation = 0. 003 units

Compute the C_p index of the process and estimate the proportion of defectives to be generated by the process, assuming that the surface roughness measurements follow normal distribution. (8)

6. (a) Explain the concept of an ideal O.C curve. (4)

(b) Draw the O.C curve for the following single sampling plan: (10)

n = 300 and c = 5.

If the incoming quality is 1%, find the AOQ.

7. (a) How to obtain AOQL for a given sampling plan? (6)

(b) For the following data choose suitable single and double sampling plans:

N = 900 , LTPD = 5.0%, β = 0.1, process average = 0.75%.

Explain the working of both plans. (8)

8. Write short notes on any TWO of the following:

(a) Taguchi's quality loss function

(b) Quality costs

(c) Deming's quality philosophy.